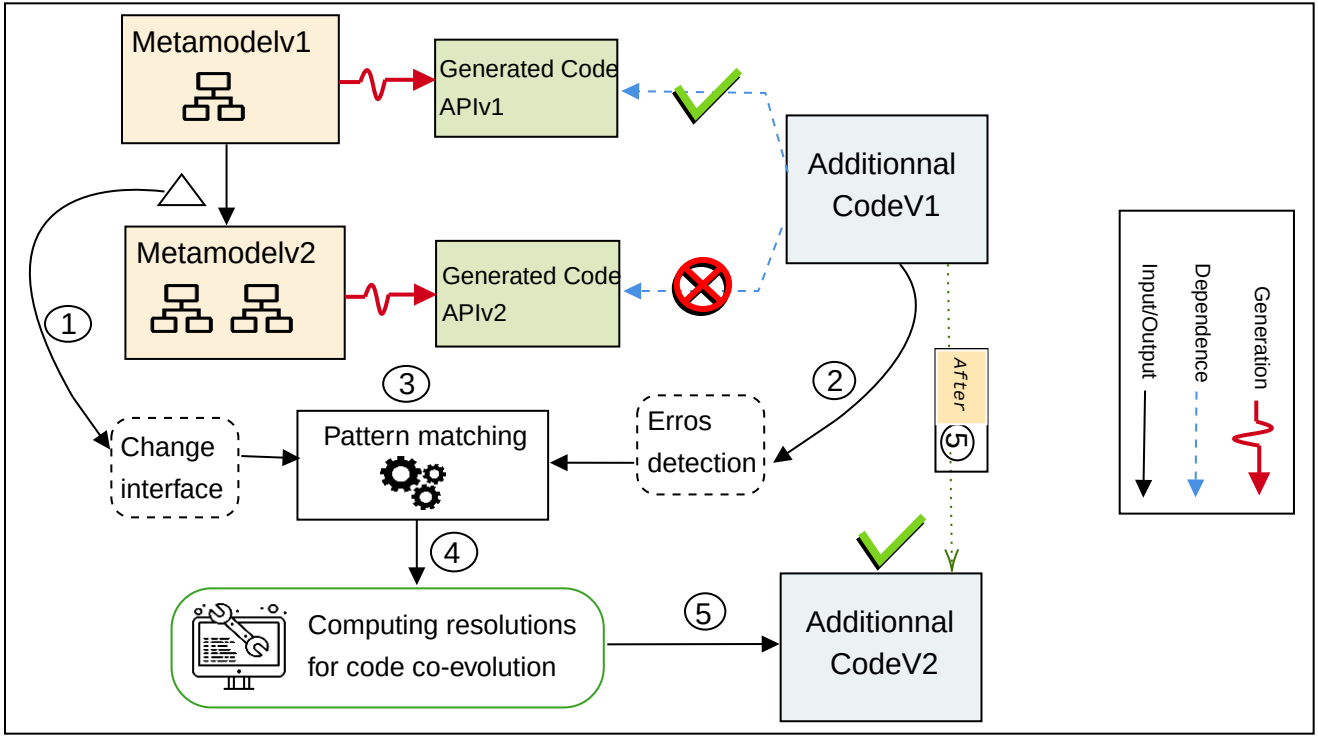
Metamodelv1
Generated Code APIv1
Additionnal CodeV1
Metamodelv2
Generated Code APIv2
1
2
3
4
5
Change interface
Pattern matching
Erros detection
After
5
Computing resolutions for code co-evolution
Additionnal CodeV2
Input/Output
Dependence
Generation