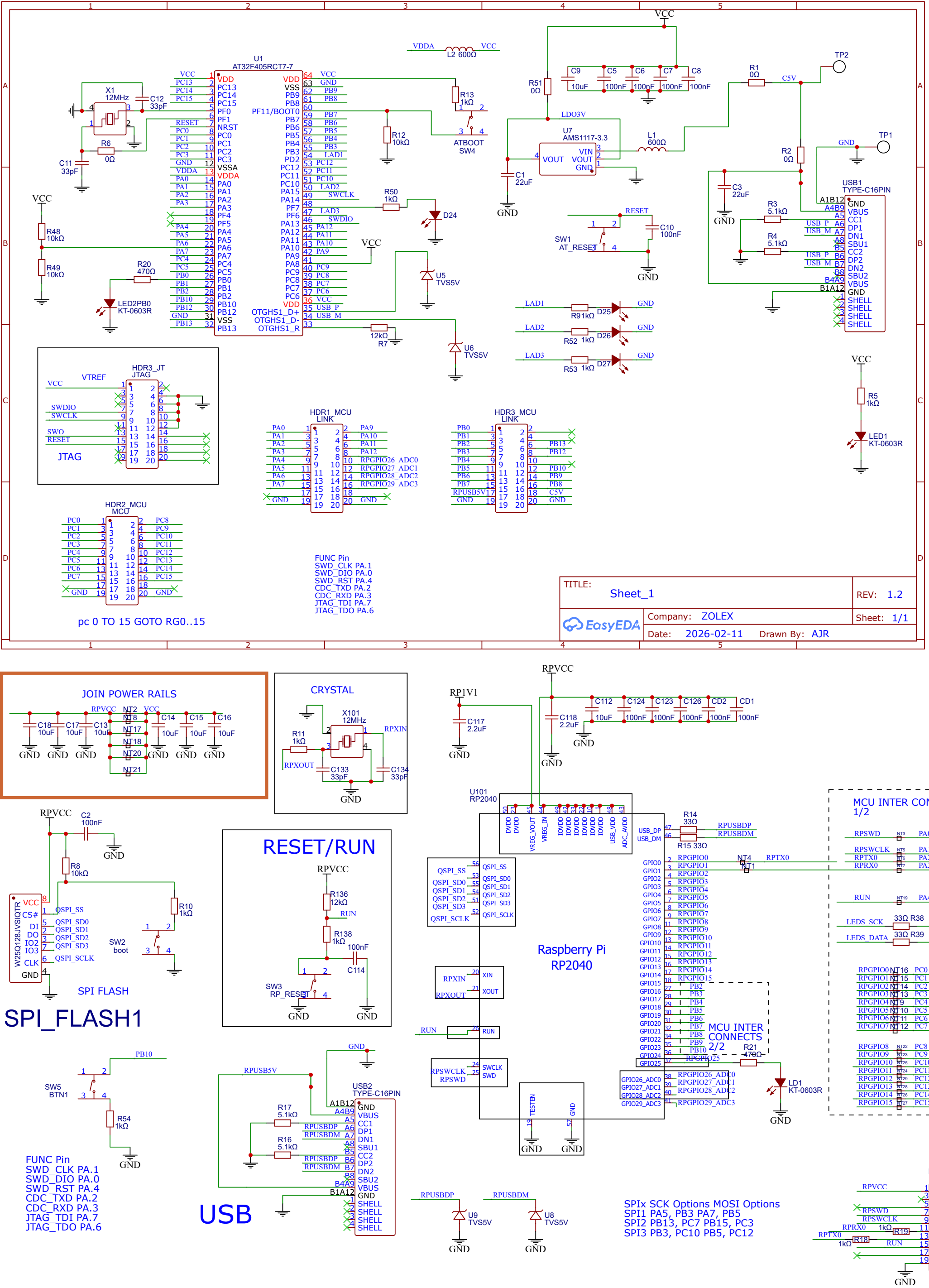
U1
AT32F405RCT7-7
X1
12MHz
C12
33pF
C11
33pF
R6
0Ω
VDDA
L2 600Ω
VCC
R13
1kΩ
ATBOOT
SW4
R12
10kΩ
R50
1kΩ
D24
U5
TVS5V
U6
TVS5V
R7
12kΩ
R20
470Ω
LED2PB0
KT-0603R
R48
10kΩ
R49
10kΩ
R51
0Ω
C9
10uF
C5
100nF
C6
100nF
C7
100nF
C8
100nF
LDO3V
U7
AMS1117-3.3
VIN
VOUT
GND
L1
600Ω
C1
22uF
R1
0Ω
C5V
TP2
TP1
R2
0Ω
C3
22uF
USB1
TYPE-C16PIN
R3
5.1kΩ
R4
5.1kΩ
SW1
AT_RESET
C10
100nF
RESET
LAD1
LAD2
LAD3
R91kΩ
R52 1kΩ
R53 1kΩ
D25
D26
D27
HDR3_JT
JTAG
VTREF
SWDIO
SWCLK
SWO
RESET
HDR1_MCU
LINK
HDR3_MCU
LINK
R5
1kΩ
LED1
KT-0603R
HDR2_MCU
MCU
pc 0 TO 15 GOTO RG0..15
FUNC Pin
SWD_CLK PA.1
SWD_DIO PA.0
SWD_RST PA.4
CDC_TXD PA.2
CDC_RXD PA.3
JTAG_TDI PA.7
JTAG_TDO PA.6
TITLE:
Sheet_1
REV: 1.2
Company: ZOLEX
Sheet: 1/1
Date: 2026-02-11
Drawn By: AJR
EasyEDA

JOIN POWER RAILS
RPVCC
VCC
C18
10uF
C17
10uF
C13
10uF
C14
10uF
C15
10uF
C16
10uF
CRYSTAL
X101
12MHz
R11
1kΩ
RPXIN
RPXOUT
C133
33pF
C134
33pF
RP1V1
C117
2.2uF
C118
2.2uF
C112
10uF
C124
100nF
C123
100nF
C126
100nF
CD2
100nF
CD1
100nF
U101
RP2040
R14
33Ω
R15 33Ω
RPUSBDP
RPUSBDM
QSPI_SS
QSPI_SD0
QSPI_SD1
QSPI_SD2
QSPI_SD3
QSPI_SCLK
RPXIN
RPXOUT
RUN
RPSWCLK
RPSWD
TESTEN
Raspberry Pi
RP2040
MCU INTER CONNECTS
1/2
RPSWD
RPSWCLK
RPTX0
RPRX0
RUN
LEDS_SCK
LEDS_DATA
33Ω R38
33Ω R39
MCU INTER
CONNECTS
2/2
R21
470Ω
LD1
KT-0603R
C2
100nF
R8
10kΩ
R10
1kΩ
W25Q128JVSIQTR
SW2
boot
SPI FLASH
SPI_FLASH1
RESET/RUN
R136
12kΩ
R138
1kΩ
100nF
C114
SW3
RP_RESET
PB10
SW5
BTN1
R54
1kΩ
FUNC Pin
SWD_CLK PA.1
SWD_DIO PA.0
SWD_RST PA.4
CDC_TXD PA.2
CDC_RXD PA.3
JTAG_TDI PA.7
JTAG_TDO PA.6
USB2
TYPE-C16PIN
R17
5.1kΩ
R16
5.1kΩ
USB
U9
TVS5V
U8
TVS5V
SPIx SCK Options MOSI Options
SPI1 PA5, PB3 PA7, PB5
SPI2 PB13, PC7 PB15, PC3
SPI3 PB3, PC10 PB5, PC12
HDR101_MCU
LINK
R18
1kΩ
R19
1kΩ

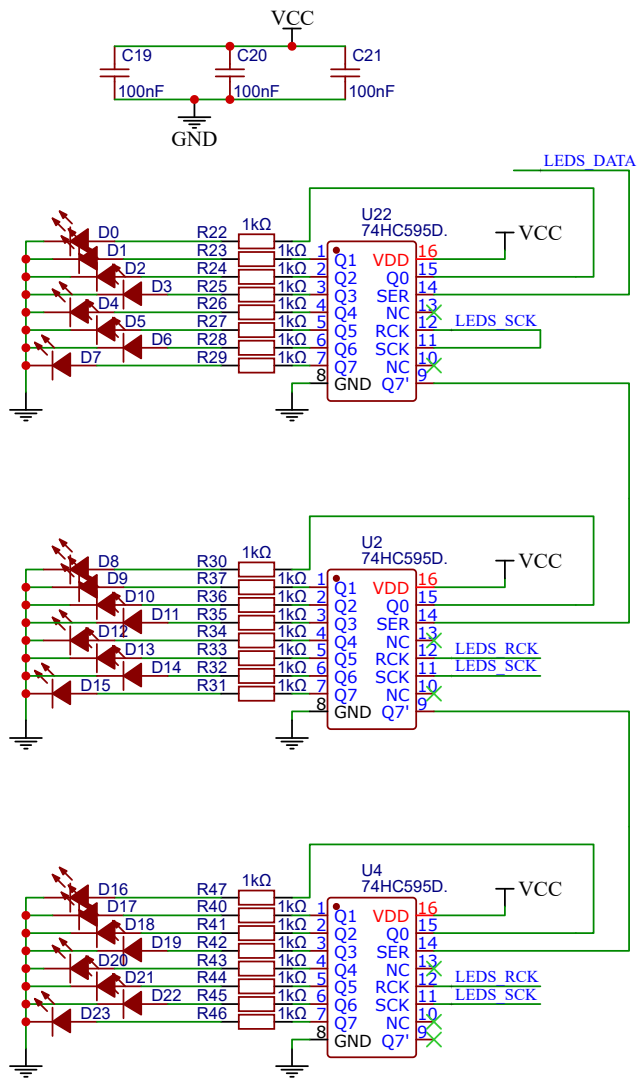
VCC
C19
C20
C21
100nF
100nF
100nF
GND
LEDS_DATA
U22
74HC595D.
VCC
D0
D1
D2
D3
D4
D5
D6
D7
R22
R23
R24
R25
R26
R27
R28
R29
1kΩ
Q1 VDD
Q2 Q0
Q3 SER
Q4 NC
Q5 RCK
Q6 SCK
Q7 NC
GND Q7'
LEDS_SCK
U2
74HC595D.
VCC
D8
D9
D10
D11
D12
D13
D14
D15
R30
R37
R36
R35
R34
R33
R32
R31
LEDS_RCK
LEDS_SCK
U4
74HC595D.
VCC
D16
D17
D18
D19
D20
D21
D22
D23
R47
R40
R41
R42
R43
R44
R45
R46
LEDS_RCK
LEDS_SCK