seeed studio

R24BBD1

Sleep Monitoring User Manual

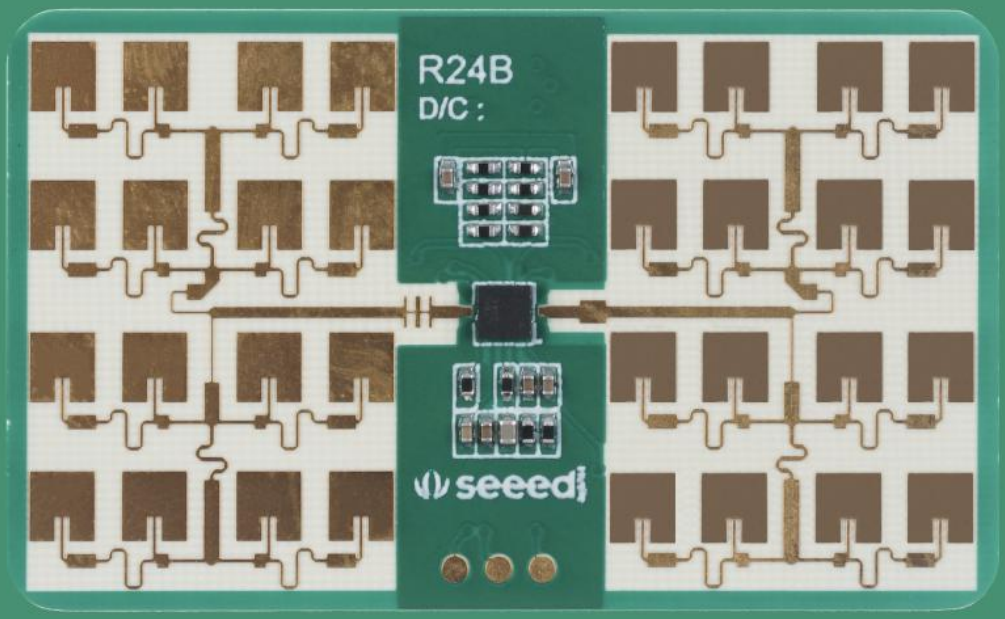

Table of Contents

Overview 3

1. Principle of operation 3

2. Hardware Design Considerations 4

2.1 The power supply can be designed with the following circuit in mind4

2.2 using the wiring diagram 5

3. Antenna and housing layout requirements 5

4. Static Protection 6

5. Functional disturbances 6

5.1 Unoccupied state, abnormal output occupied 6

5.2 Manned status, abnormal output unoccupied 7

6. Functions in detail 8

6.1 Function point descriptions 8

6.2 Description of the output of the body motion amplitude parameter 9

7. Description of the agreement 9

8. Communication commands and parameter definitions 10

8.1 Definition and description of the frame structure 10

8.2 Description of address assignment and data information 11

Overview

This manual primarily describes the practical application of the radar system and the issues that should be addressed at each stage to minimize design costs, increase product stability, and improve project efficiency.

This manual talks about the hardware circuit reference design, the radar antenna and shell layout requirements, and the use of a multifunctional standard UART protocol.

The radar is a self-contained space-sensing sensor consisting of an RF antenna, a radar chip, and a high-frequency multi-core processor. To meet the diverse needs of users, it is built on a stable, flexible, and superior algorithmic architecture core. It can be connected to a remote or host computer so that the status and detection data can be sent in various ways. It also has several groups of GPIOs that allow the user to customize the development.

1. Principle of operation

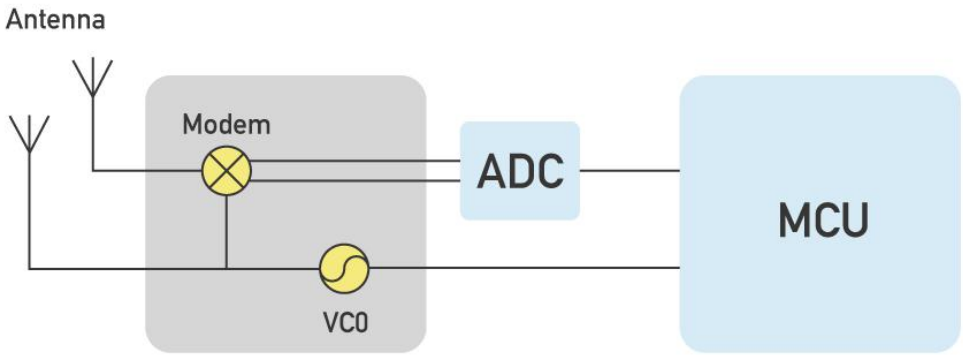

The radar transmits a 24G band millimeter-wave signal, the measured target reflection electromagnetic wave signal, demodulates the transmitted signal, and then obtains echo demodulation signal data through amplification, filtering, ADC, and other processes. The echo signal's amplitude, frequency, and phase are decoded in the MCU unit, which ultimately enables the measurement of the target parameters (breathing, motion, tiny motions, etc.).

2. Hardware Design Considerations

The standard voltage power supply and input current of the radar under normal circumstances should be 4.9–6V and 200 mA, respectively. Power supply design, power ripple ≤ 100mV.

2.1 The power supply can be designed with the following circuit in mind

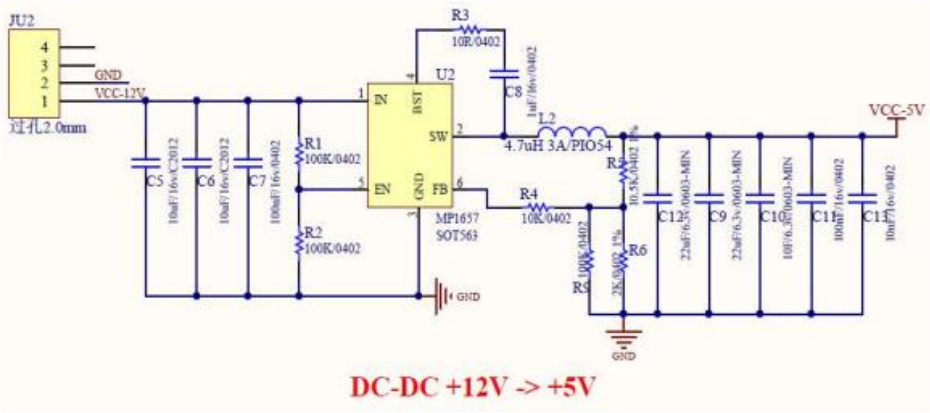

Fig. 1

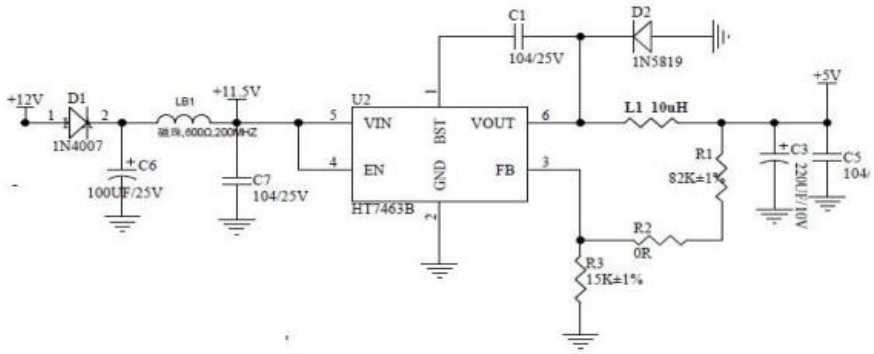

Fig. 2

2.2 using the wiring diagram

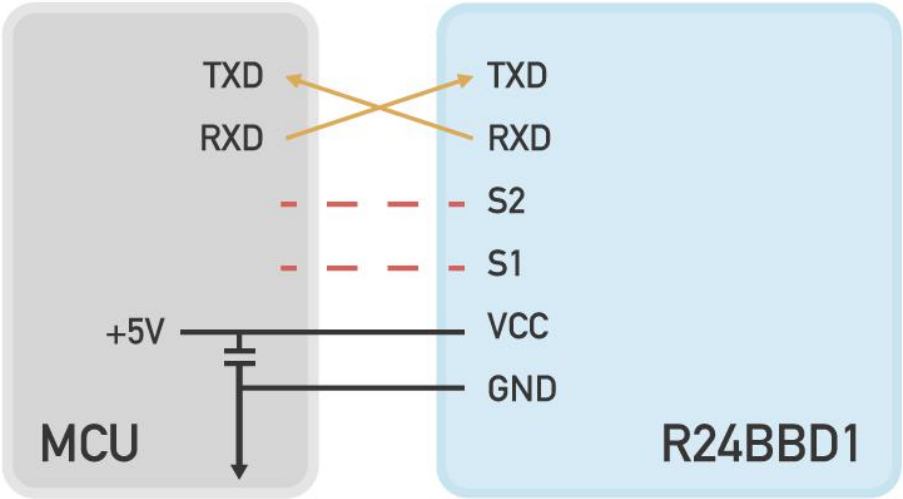

Fig. 3 Schematic diagram of the radar module and peripheral connections

3. Antenna and housing layout requirements

PCBA: Mount the radar ≥1mm higher than the other devices.

Case: Keep 2-5mm between the radar antenna and other shell surfaces.
Case detection surface: To avoid coverage area performance, keep the non-metallic case flat and straight to avoid bending.

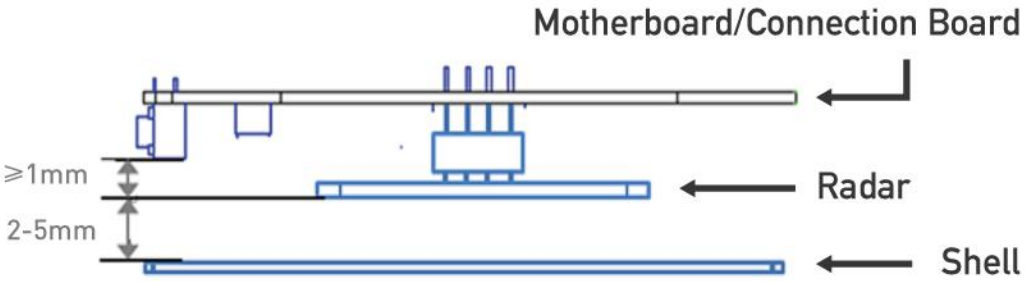

Fig. 4 Schematic diagram of the radar module and peripheral connections

4. Electrostatic (ESD) protection

Radar modules contain electrostatic-sensitive circuits, so they risk electrostatic shocks. Thus, it is essential to maintain proper electrostatic protection throughout the process of transportation, storage, work, and handling. Avoid touching the radar module's antenna surface and connector pins, but hold the corners. We recommend that you wear anti-static gloves during the operation of the radar sensor.

5. Function interference item

5.1 Unoccupied state, abnormal output occupied

When the radar is in its normal state, it will accurately determine the existence of human sitting or sleeping states and will output fall data, breathing information, vital signs, etc.

a. Radar scanning covers a large area. You can detect movement around the doorway and the next door in the wooden wall.
   Adjustment method: Reduce radar sensitivity; the radar has scene settings

b. When the radar is facing toward the air conditioner and fan when it is operating
   Adjustment method: Position the radar so it doesn't directly face the air conditioner and fan

c. Object shaking caused by air conditioning wind
   Adjustment method: Cotton and non-metallic items do not cause false alarms. Metal items should be well-positioned to avoid interference.

d. If the radar is not fixed, vibration may cause false alarms. To prevent this from occurring, support the radar in a fixed position to avoid vibrations and shakes.

e. Occasional moving objects, such as pets, birds, or other animals.
   Because of the high sensitivity of the radar's detection of micromotions, this interference cannot be eliminated.

f. Power supply interference can interfere with judgment, resulting in occasional errors.
   Maintain a stable current power supply and minimize ripple.

5.2 Occupied status, abnormal output unoccupied

Radar can determine whether a human body exists by transmitting and receiving electromagnetic waves. The closer the body is to the radar, the higher the accuracy is.

a. The human body is out of radar's range.
   Adjust the installation angle to fit the range of the radar.
   Measurement range: the electromagnetic wave reflection area is different in different environments, and the scanning area may be slightly different.

b. Output error due to metal shielding
   Thick office desks and chairs and metallic seats. This will block electromagnetic waves from penetrating and causing inaccurate judgments.

c. The difference in scanning angle.
   When the radar fails to detect the body part (torso area), it can cause errors.

d. The radar's sensitivity is too low
   The radar can be adjusted in order to improve sensitivity.

6. Functions details

6.1 Function point descriptions

Functions	Status change time/function explanation
DP1: occupied/unoccupied	No one to occupied, report within 0.5s Manned to unoccupied, no status output in 1–2 minutes or so
DP2: Some people are stationary / Some people are active	Static dynamic switching, reporting within 0.5 seconds
DP3: Someone close to the device / someone moving away from the device / someone moving without direction	Status output once every 2 seconds
DP4: Body movement amplitude	Data output once every 5 seconds

Functions	Status change time/function explanation
parameter 0 – 100	Reference (description of output of body motion amplitude parameters)
DP5: Sensitivity setting 1 – 10 steps	Default scene mode, adapted to 10 positions of adjustment
DP6: Scene modes (bed, bathroom, hotel, bedroom, office, default mode)	Adapted to different scenarios according to the size of the area
DP7: No false alarm confirmation prompt	
DP8: Sleep parameter switch	Off by default, sleep function only works when on
DP9: Bed entry/exit	Output status in 3S clock
DP10: Number of bed entries/exits	Count the number of times you enter/leave bed in a day
DP11: Stationary dwell alarms	Outputs in three states, once every 10 minutes
DP12: Length of Sobriety	
DP13: Length of light sleep	
DP14: Length of deep sleep	
DP15: Breathing rate	Normal number of breaths can be tested
DP16: Breathing rate detection signal	If there are factors such as distance, range and other effects, output breath-holding abnormalities, good signals, abnormal movements,

Functions	Status change time/function explanation
	abnormal states of shortness of breath
DP17: Sleep scoring (optional, users can rate according to their own way)	Combined day's sleep rating

6.2 Description of the output of the body motion amplitude parameter

Body movement amplitude parameters		
0%	None	Environmental unmanned
1%	Stationary (sleep)	Only breathing without body movement
2% – 30%	Micro–Movements	Only minor head or limb movements Movement
31% – 60%	Walking/fast body movements	Slower body movements
61% – 100%	Running/close range big moves	Rapid body movement

7. Description of the agreement

This protocol is used for communications between a millimeter-wave sleep detection radar and a host computer. The protocol outlines the radar’s workflow describes the interface protocol's composition architecture and provides the commands and data necessary for the relevant radar function. The serial port is defined as the following:
Interface level: TTL
Baud rate: 9600bps

Stop bits: 1
Data bits: 8

Parity: None

8. Communication commands and parameter definitions

8.1 Definition and description of the frame structure

Frame structure definition

Starting Code	Length of data		Function codes	Address code 1	Address code 2	Data	Check Code	
0X55	Lenth_L	Lenth_H	Command	Address_1	Address_2	Data	Crc16_L	Crc16_H
1 Byte	1 Byte	1 Byte	1 Byte	1 Byte	1 Byte	n Byte	1 Byte	1 Byte
Starting Code	Length of data		Function codes	Address code 1	Address code 2	Data	Check Code	

Frame structure description

a. Start code: 1 Byte, fixed to 0X55.
b. Data length: 2 Byte, low byte before, high byte after. Length = Data Length + Function Code + Address Code 1 + Address Code 2 + Data + Checksum.
c. Function code: 1 Byte
   Read command: 0X01
   Write command: 0X02
   Passive report command: 0X03
   Active report command: 0X04
d. Address code:
   Address code 1 indicates the functional classification.
   The address code 2 indicates the specific function.
   Refer to the address assignment and data information description.
e. Data: n Byte
f. Checksum: 2 Byte, low byte before, high byte after.
   CRC16 checksum is used. Refer to Appendix 1 for reference codes

8.2 Description of address assignment and data information

24G Bio-aware radar interface content					
	Function Code	Address code 1	Address code 2	Data	Notes
1	Read command 0x01	Marking search 0x01	Device ID 0X01		
2			Software version 0x02		
3			Hardware version 0x03		
4			Protocol version 0x04		
5		Radar Information Search 0x03	Environmental status 0X05		
6			Signs parameters 0x06		
7		System parameter search 0x04	Threshold gear 0x0C		
8			Scene setting 0x10		
			Forced into unoccupied gear 0X12		
9		Other information enquiries 0X05	Sleep detection parameter switch 0X0D		Enquiry Current sleep detection switch status

24G Bio-aware radar interface content					
1	copy order 0x02	System parameters 0x04	Threshold gear 0x0C	Enumeration range1~10	Corresponding to1 2 3 4 5 6 7 8 9 10 gears (default 7) The higher the gear, the more sensitive it is
2			Scene setting 0x10	Default mode 0x00	
3				Area detection (top loading) 0x01	
4				Bathroom (top mounted) 0x02	
5				Bedroom (top loading) 0x03	
6				Living room (top mounted) 0x04	
7				Office (top loading) 0x05	
8				Hotel (top loading) 0x06	
			Forced into unoccupied gear 0X12	No forced access to the unoccupied function 0X00	
				10s 0X01	
				30s 0X02	
				1min 0X03	
				2min 0X04	
				5min 0X05	
				10min 0X06	
				30min 0X07	
				60min 0X08	

24G Bio-aware radar interface content					
9		Other functions 0X05	Reboot 0X04		
10			Sleep function switch 0x0D	Off 0x00	
				On 0x01	
			Start OTA upgrade 0X08	4byte Integer data (firmware package size)+ nbyte (software version number)	
			Upgrade package transfer 0X09	Packet Offset (4byte) + Packet (1024byte)	
			End of upgrade information 0X0A	Fixed characters 0X0F	

24G Bio-aware radar interface content					
1	Passive reporting of orders 0x03	Reporting module identification 0X01	Device ID 0x01	12 Byte data	
2			Software version 0x02	10 Byte data	
3			Hardware version 0x03	8 Byte data	
4			Protocol version 0x04	8 Byte data	

24G Bio-aware radar interface content					
1	Passive reporting of orders 0x03	Upload Radar Info 0x03	Environment status 0x05	Nobody 00 FF FF	
2				Static 01 00 FF	
3				Movement 01 01 01	
4			Signs parameters 0x06	4 Byte Float data (see Appendix 2)	
5		Reporting system parameters 0X04	Threshold gear 0X0C	Current gear value (0X01~0X0a)	
6			Scene setting 0x10	Default mode 0x00	
7				Area detection (top loading) 0x01	
8				Bathroom (top mounted) 0x02	
9				Bedroom (top loading) 0x03	
10				Living room (top mounted) 0x04	
11				Office (top loading) 0x05	
12				Hotel (top loading) 0x06	
			Forced into unoccupied gear 0X12	No forced access to the unoccupied function 0X00	
				10s 0X01	
				30s 0X02	
				1min 0X03	
				2min 0X04	
				5min 0X05	
				10min 0X06	
				30min 0X07	
				60min 0X08	

13		Other functions 0X05	Sleep function switch 0x0D	Off 0x00	
				On 0x01	
14			Start OTA upgrade 0X08	Failed 0X00	
15				Success 0X01	
16			Upgrade package transfer 0X09	Fixed characters 0X0F	

24G Bio-aware radar interface content						
1	Proactive reporting of commands 0X04	Report radar information 0x03	Environment status 0x05	Unoccupied 00 FF FF		
2				Someone is stationary 01 00 FF		
3				U Some people exercise 01 01 01		
4			Motor signs parameters 0X06	4Byte Float data		
5			Approaching away state 0x07	Fixed characters 0x01 0x01	None 0x01	
					Approach 0x02	
					Far away 0x03	
6		Report other information 0X05	Heartbeat Pack 0X01	Unoccupied 00 FF FF		
7				Someone is stationary 01 00 FF		
8				Some people exercise 01 01 01		

24G Bio-aware radar interface content					
9			Abnormal reset 0X02	0X0F	When the radar is restarted or re-powered, an abnormal reset command is reported before the initialisation process begins and a successful initialisation command is reported. This means that the radar has been initialized successfully. Start of normal operations.
			Initialisation successful 0X0A	0X0F	

24G Bio-aware radar interface content					
1	Sleeping radar data reporting 0x05	Breathing parameters 0x01	Breathing rate 0x01	1Byte integer data	
			Detection signal 0x04	Breath-holding abnormality 0x01	
				No 0X02	
				Normal 0x00	

24G Bio-aware radar interface content					
				Movement abnormalities 0X04	When large movements of the person occur, abnormal movements are indicated, informing the user that large movements may affect the radar's detection of breathing
				Shortness of breath abnormal 0X05	
2		Scenario assessment 0x03	In/out of bed 0x07	Out of bed 0X00	
3				In bed 0X01	
				None 0x02	Sleep switch off shows none
4			Sleep state assessment	Awake 0x00	
5				Light sleep 0x01	
6				Deep sleep 0x02	
7				None 0x03	Sleep switch off shows none
8		Duration parameter 0x04	Duration of wakefulness 0x01	4Byte integer data	Unit min
			Length of light sleep 0x02	4Byte integer data	
			Length of deep sleep 0x03	4Byte integer data	

24G Bio-aware radar interface content					
9		Sleep quality parameter 0x05	Sleep quality score 0x01	1Byte integer data	
		Heart rate parameter 0x06	Heart rate value 0x01	1Byte integer data	Unit times/min

Description:

1. The read-write command is the command that is transmitted from the host computer to the radar.

2. The reporting command is when the radar transmits information to the host computer.

3. Human body sensitivity is 1-10 levels, and the default is 7. The higher the level, the more sensitive it is.

Appendix 1: CRC check digit reference parsing codes

```
const unsigned char cuc_CRCHi[256]=
{
```

```
    0x00, 0xC1, 0x81, 0x40, 0x01, 0xC0, 0x80, 0x41, 0x01, 0xC0, 0x80, 0x41,
    0x00, 0xC1, 0x81, 0x40, 0x01, 0xC0, 0x80, 0x41, 0x00, 0xC1, 0x81, 0x40,
    0x00, 0xC1, 0x81, 0x40, 0x01, 0xC0, 0x80, 0x41, 0x01, 0xC0, 0x80, 0x41,
    0x00, 0xC1, 0x81, 0x40, 0x00, 0xC1, 0x81, 0x40, 0x01, 0xC0, 0x80, 0x41,
    0x00, 0xC1, 0x81, 0x40, 0x01, 0xC0, 0x80, 0x41, 0x01, 0xC0, 0x80, 0x41,
    0x00, 0xC1, 0x81, 0x40, 0x01, 0xC0, 0x80, 0x41, 0x00, 0xC1, 0x81, 0x40,
    0x00, 0xC1, 0x81, 0x40, 0x01, 0xC0, 0x80, 0x41, 0x00, 0xC1, 0x81, 0x40,
    0x01, 0xC0, 0x80, 0x41, 0x01, 0xC0, 0x80, 0x41, 0x00, 0xC1, 0x81, 0x40,
    0x00, 0xC1, 0x81, 0x40, 0x01, 0xC0, 0x80, 0x41, 0x01, 0xC0, 0x80, 0x41,
    0x00, 0xC1, 0x81, 0x40, 0x01, 0xC0, 0x80, 0x41, 0x00, 0xC1, 0x81, 0x40,
    0x00, 0xC1, 0x81, 0x40, 0x01, 0xC0, 0x80, 0x41, 0x01, 0xC0, 0x80, 0x41,
    0x00, 0xC1, 0x81, 0x40, 0x00, 0xC1, 0x81, 0x40, 0x01, 0xC0, 0x80, 0x41,
    0x00, 0xC1, 0x81, 0x40, 0x01, 0xC0, 0x80, 0x41, 0x01, 0xC0, 0x80, 0x41,
    0x00, 0xC1, 0x81, 0x40, 0x00, 0xC1, 0x81, 0x40, 0x01, 0xC0, 0x80, 0x41,
    0x01, 0xC0, 0x80, 0x41, 0x00, 0xC1, 0x81, 0x40, 0x01, 0xC0, 0x80, 0x41,
    0x00, 0xC1, 0x81, 0x40, 0x00, 0xC1, 0x81, 0x40, 0x01, 0xC0, 0x80, 0x41,
    0x00, 0xC1, 0x81, 0x40, 0x01, 0xC0, 0x80, 0x41, 0x01, 0xC0, 0x80, 0x41,
    0x00, 0xC1, 0x81, 0x40, 0x01, 0xC0, 0x80, 0x41, 0x00, 0xC1, 0x81, 0x40,
    0x00, 0xC1, 0x81, 0x40, 0x01, 0xC0, 0x80, 0x41, 0x01, 0xC0, 0x80, 0x41,
    0x00, 0xC1, 0x81, 0x40, 0x00, 0xC1, 0x81, 0x40, 0x01, 0xC0, 0x80, 0x41,
    0x00, 0xC1, 0x81, 0x40, 0x01, 0xC0, 0x80, 0x41, 0x01, 0xC0, 0x80, 0x41,
    0x00, 0xC1, 0x81, 0x40
};
```

```
const unsigned char cuc_CRCLo[256]=
{
  0x00, 0xC0, 0xC1, 0x01, 0xC3, 0x03, 0x02, 0xC2, 0xC6, 0x06, 0x07, 0xC7,
  0x05, 0xC5, 0xC4, 0x04, 0xCC, 0x0C, 0x0D, 0xCD, 0x0F, 0xCF, 0xCE, 0x0E,
  0x0A, 0xCA, 0xCB, 0x0B, 0xC9, 0x09, 0x08, 0xC8, 0xD8, 0x18, 0x19, 0xD9,
  0x1B, 0xDB, 0xDA, 0x1A, 0x1E, 0xDE, 0xDF, 0x1F, 0xDD, 0x1D, 0x1C, 0xDC,
  0x14, 0xD4, 0xD5, 0x15, 0xD7, 0x17, 0x16, 0xD6, 0xD2, 0x12, 0x13, 0xD3,
  0x11, 0xD1, 0xD0, 0x10, 0xF0, 0x30, 0x31, 0xF1, 0x33, 0xF3, 0xF2, 0x32,
  0x36, 0xF6, 0xF7, 0x37, 0xF5, 0x35, 0x34, 0xF4, 0x3C, 0xFC, 0xFD, 0x3D,
  0xFF, 0x3F, 0x3E, 0xFE, 0xFA, 0x3A, 0x3B, 0xFB, 0x39, 0xF9, 0xF8, 0x38,
  0x28, 0xE8, 0xE9, 0x29, 0xEB, 0x2B, 0x2A, 0xEA, 0xEE, 0x2E, 0x2F, 0xEF,
  0x2D, 0xED, 0xEC, 0x2C, 0xE4, 0x24, 0x25, 0xE5, 0x27, 0xE7, 0xE6, 0x26,
  0x22, 0xE2, 0xE3, 0x23, 0xE1, 0x21, 0x20, 0xE0, 0xA0, 0x60, 0x61, 0xA1,
  0x63, 0xA3, 0xA2, 0x62, 0x66, 0xA6, 0xA7, 0x67, 0xA5, 0x65, 0x64, 0xA4,
  0x6C, 0xAC, 0xAD, 0x6D, 0xAF, 0x6F, 0x6E, 0xAE, 0xAA, 0x6A, 0x6B, 0xAB,
  0x69, 0xA9, 0xA8, 0x68, 0x78, 0xB8, 0xB9, 0x79, 0xBB, 0x7B, 0x7A, 0xBA,
  0xBE, 0x7E, 0x7F, 0xBF, 0x7D, 0xBD, 0xBC, 0x7C, 0xB4, 0x74, 0x75, 0xB5,
  0x77, 0xB7, 0xB6, 0x76, 0x72, 0xB2, 0xB3, 0x73, 0xB1, 0x71, 0x70, 0xB0,
  0x50, 0x90, 0x91, 0x51, 0x93, 0x53, 0x52, 0x92, 0x96, 0x56, 0x57, 0x97,
  0x55, 0x95, 0x94, 0x54, 0x9C, 0x5C, 0x5D, 0x9D, 0x5F, 0x9F, 0x9E, 0x5E,
  0x5A, 0x9A, 0x9B, 0x5B, 0x99, 0x59, 0x58, 0x98, 0x88, 0x48, 0x49, 0x89,
  0x4B, 0x8B, 0x8A, 0x4A, 0x4E, 0x8E, 0x8F, 0x4F, 0x8D, 0x4D, 0x4C, 0x8C,
  0x44, 0x84, 0x85, 0x45, 0x87, 0x47, 0x46, 0x86, 0x82, 0x42, 0x43, 0x83,
  0x41, 0x81, 0x80, 0x40
};
```

```
static unsigned short int  us_CalculateCrc16(unsigned char *lpuc_Frame, unsigned short int  lus_Len)
{
  unsigned char luc_CRCHi = 0xFF;
  unsigned char luc_CRCLo = 0xFF;
  int li_Index=0;

  while(lus_Len--)
  {
      li_Index = luc_CRCLo ^ *( lpuc_Frame++);
      luc_CRCLo = (t_BYTE)( luc_CRCHi ^ cuc_CRCHi[li_Index]);
      luc_CRCHi = cuc_CRCLo[li_Index];
  }
  return (unsigned short int )(luc_CRCLo << 8 | luc_CRCHi);
}
```

Appendix 2: Analysis codes for motor sign parameters

```
typedef union
{
    unsigned char Byte[4];
    float Float;
}Float_Byte;

void main()
{
    Float_Byte fb;
    fb.Byte[0] = 0x9A;
    fb.Byte[1] = 0xFB;
    fb.Byte[2] = 0xE7;
    fb.Byte[3] = 0x3F;
    printf("%f\r\n",fb.Float);
}
```

Historical version update notes

Revision	Release Data	Summary
V1.0_0212	2020/02/12	First draft
V1.1_0319	2021/03/19	Readjustment
V1.2_0628	2021/6/28	Add Human sensitivity explained and fall sensitivity explained
V1.3_0906	2021/9/06	Human sensitivity revised from 0–9 to 1–10
V1.5_0210	2022/2/10	Add initialization success command protocol
V1.6_0221	2–22/2/21	Adding a forced entry unmanned gear protocol
V1.7_0224	2022/2/24	Addition of a "none" protocol in the entry and exit states and a protocol for reporting heart rate data