Review on C Programming

Review on C Programming

- What should you do with the C programming?
  - How to use an **array** and a **pointer**
    - Understand the relationship between the array and the pointer.
    - Use **dynamic memory allocation**.
  - How to define a **structure** and make use of it
    - Understand **self-referential structures**.
  - How to use **recursive programming**
    - Transform iterative programming into recursive programming.
- A Progrmmaing Course in any language is a prerequisite for this course!

What is Array?

- Definition
  - A collection of elements with same data types
  - Each element is sequential in memory.

```
int score[10];
```

Data type **Array name** **Array size**

- Array index
  - Each element can be referenced by an **index**.
  - **Index ranges: [0] ~ [size – 1]**

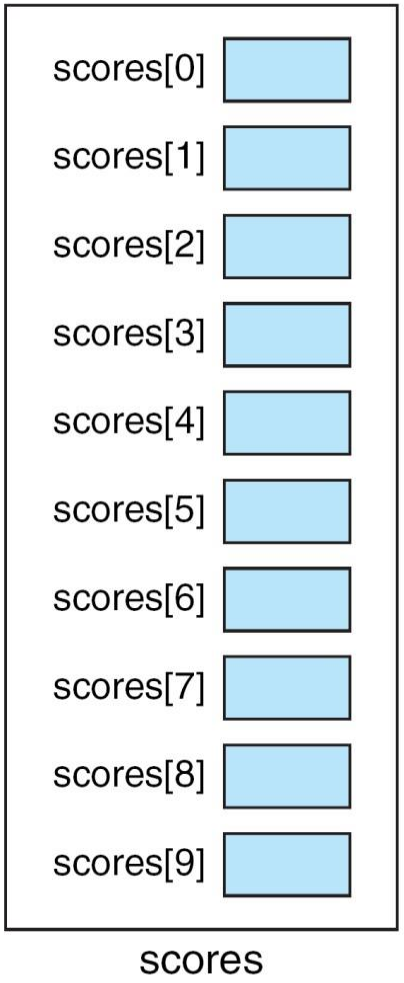

Example: Array

- Input five numbers and print them reversely.

```
#include <stdio.h>
#define ARRAY_SIZE    5

int main()
{
    int numbers[ARRAY_SIZE], i;

    printf("Input five numbers\n");
    for (i = 0; i < ARRAY_SIZE; i++)
        scanf("%d", &numbers[i]);





}
```

Function Call with Array

- Calculating the average of values in array

```
#include <stdio.h>
#define ARRAY_SIZE    5



int main()
{
    int numbers[ARRAY_SIZE];

    inputNumbers(numbers, ARRAY_SIZE);
    printf("average: %.3lf", computeAverage(numbers, ARRAY_SIZE));

    return 0;
}
```

Function Call with Array

- Calculating the average of values in array

```
void inputNumbers(int num[], int len)
{

}

double computeAverage(int num[], int len)
{

}
```

Two-Dimensional Array

- Filling all entries in the two-dimensional matrix

```
int row, col, matrix[6][6];

for (row = 0; row < 6; row++)
{
    for (col = 0; col < 6; col++)
    {
        if (row < col)
            matrix[row][col] = 1;
        else if (row == col)
            matrix[row][col] = 0;
        else
            matrix[row][col] = -1;
    }
}
```

0	1	1	1	1	1
-1	0	1	1	1	1
-1	-1	0	1	1	1
-1	-1	-1	0	1	1
-1	-1	-1	-1	0	1
-1	-1	-1	-1	-1	0

int scores[10];

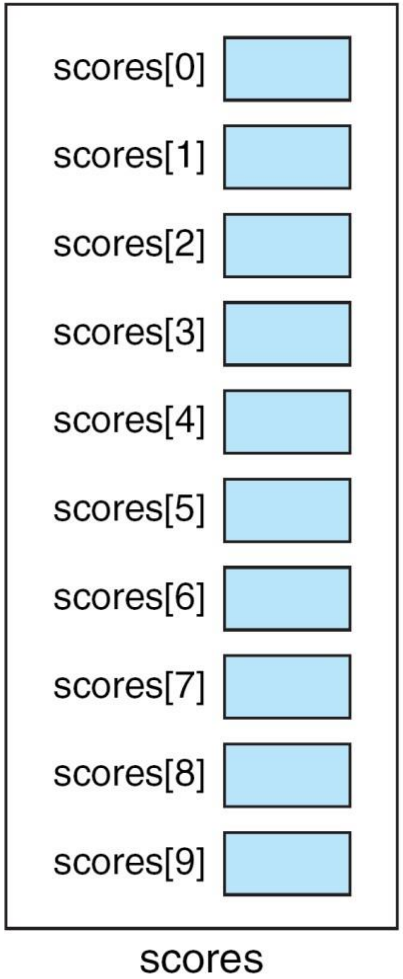

int matrix[6][6];

0	1	1	1	1	1
-1	0	1	1	1	1
-1	-1	0	1	1	1
-1	-1	-1	0	1	1
-1	-1	-1	-1	0	1
-1	-1	-1	-1	-1	0

What is Pointer?

- Definition
  - A variable to store a **memory address** instead of a value

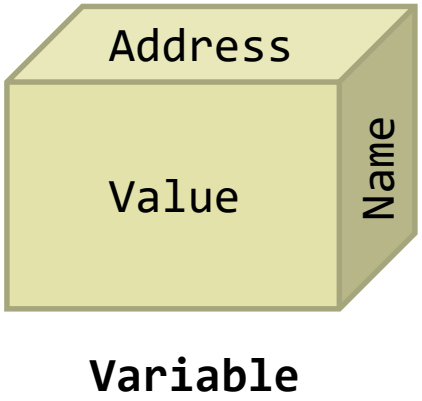

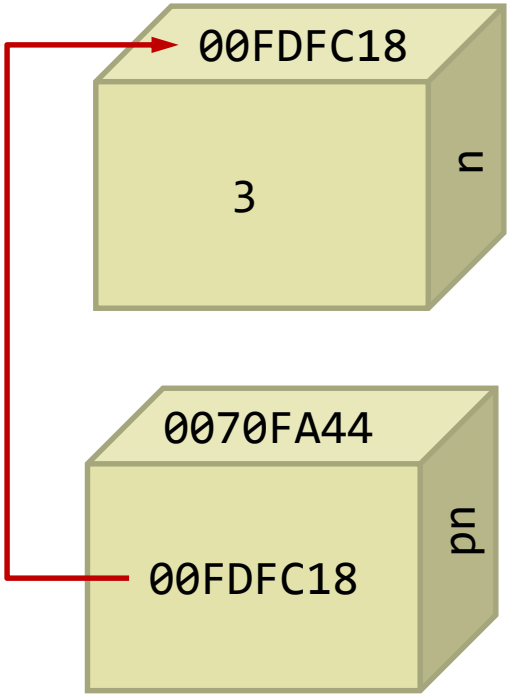


```
int n = 3;
```

```
int* pn = &n;
```

& (Ampersand) Operator

- Reference operator
  - Return the address of an variable.

```c
#include <stdio.h>

int main()
{
  char c = 'A';
  char *pc = &c;

  printf("%c %p\n", c, pc);
  printf("%p %p\n", &c, &pc);
  printf("%d %d\n", sizeof(c), sizeof(pc));

  return 0;
}
```

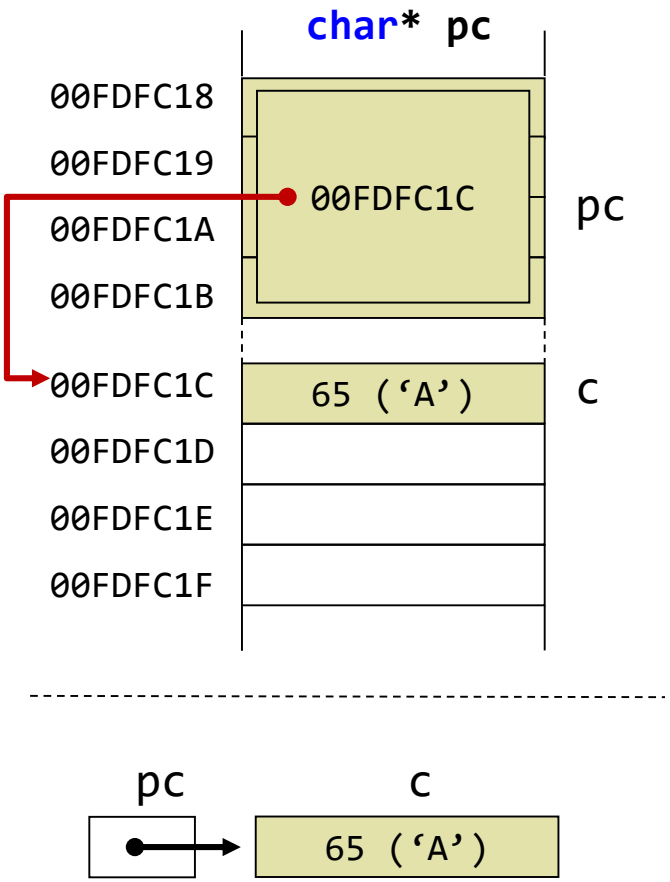

& (Ampersand) Operator

- What is the size of a pointer variable?

```c
#include <stdio.h>

int main()
{
  int n = 3;
  int *pn = &n;

  printf("%d %p\n", n, pn);
  printf("%p %p\n", &n, &pn);
  printf("%d %d\n", sizeof(n), sizeof(pn));

  return 0;
}
```

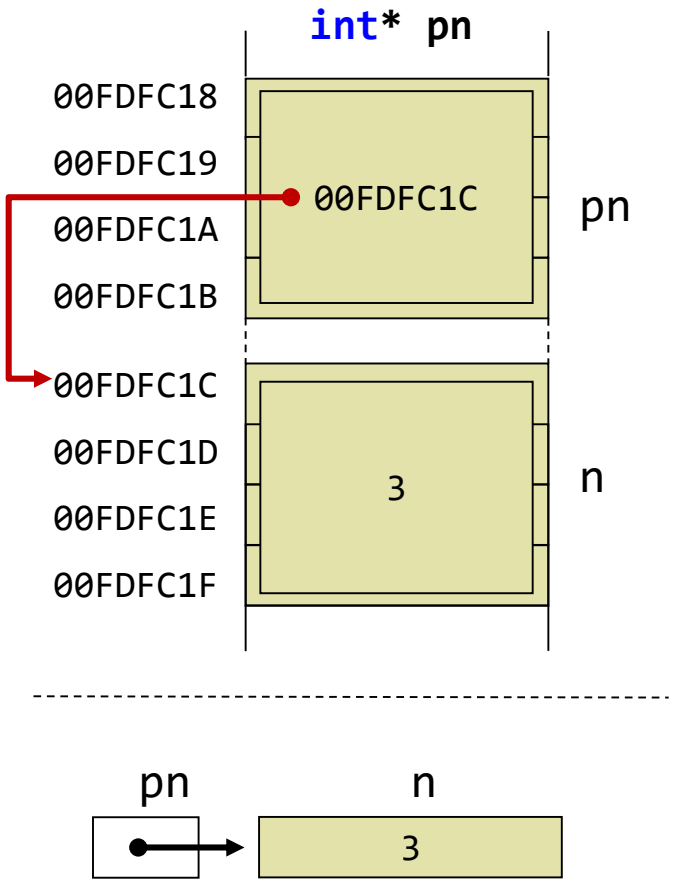

* (Asterisk) Operator

- Dereference operator
  - Return the value at the pointer address.

```c
#include <stdio.h>

int main()
{
    char c = 'A';
    char *pc = &c;

    printf("%c %c\n", c, *pc);

    *pc = 'C';
    printf("%c %c\n", c, *pc);

    return 0;
}
```

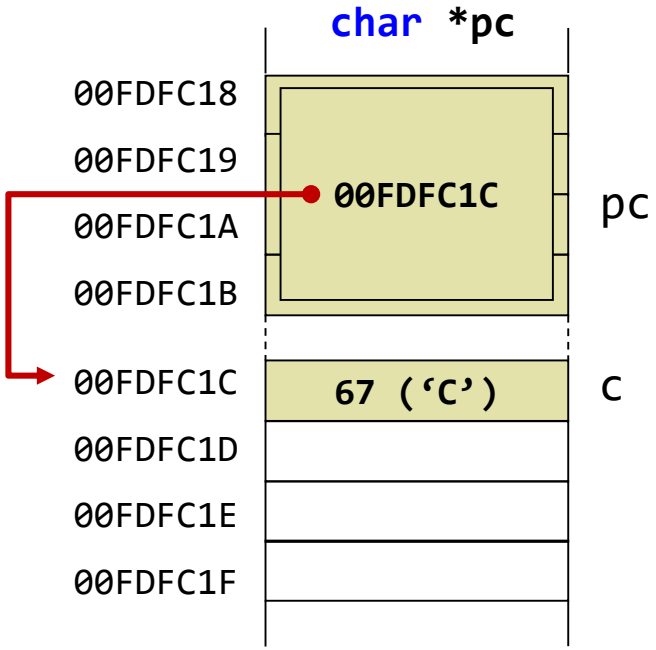

Example: Pointer

- Use address and dereference operators correctly.

```c
#include <stdio.h>

int main()
{
    int a, b, c;
    int *p, *q, *r;

    a = 6, b = 10;
    p = &b, q = p, r = &c;
    p = &a, *q = 8, *r = *p;
    *r = a + *q + *&c;

    printf("%d %d %d", a, b, c);

    return 0;
}
```

Example: Pointer

```c
#include <stdio.h>

int main()
{
    int a, b, c;
    int *pa = &a, *pb = &b, *pc = &c;

    *pa = 10, *pb = 20;
    *pc = *pa + *pb;

    printf("%d %d %d", a, b, c);

    return 0;
}
```

Functional Call with Pointer

- Two types for inter-function communication
  - **Call by value**: passing by value
  - **Call by reference**: passing by address

```c
#include <stdio.h>

void swap1(int x, int y);
void swap2(int* px, int* py);

int main()
{
    int a = 5, b = 7;
    swap1(a, b);
    printf("%d %d\n", a, b);
    swap2(a, b);
    printf("%d %d\n", a, b);
    return 0;
}
```

```c
void swap1(int x, int y)
{
    int temp = x;
    x = y;
    y = temp;
}
```

```c
void swap2(int* px, int* py)
{
    int temp = *px;
    *px = *py;
    *py = temp;
}
```

Pointer to Pointer

- We can use a pointer that points to another pointer.

```c
#include <stdio.h>

int main()
{
  char c = 'A';
  char* pc = &c;
  char** ppc = &pc;

  printf("%p %p\n", pc, ppc);
  printf("%d %d\n", sizeof(pc), sizeof(ppc));

  return 0;
}
```

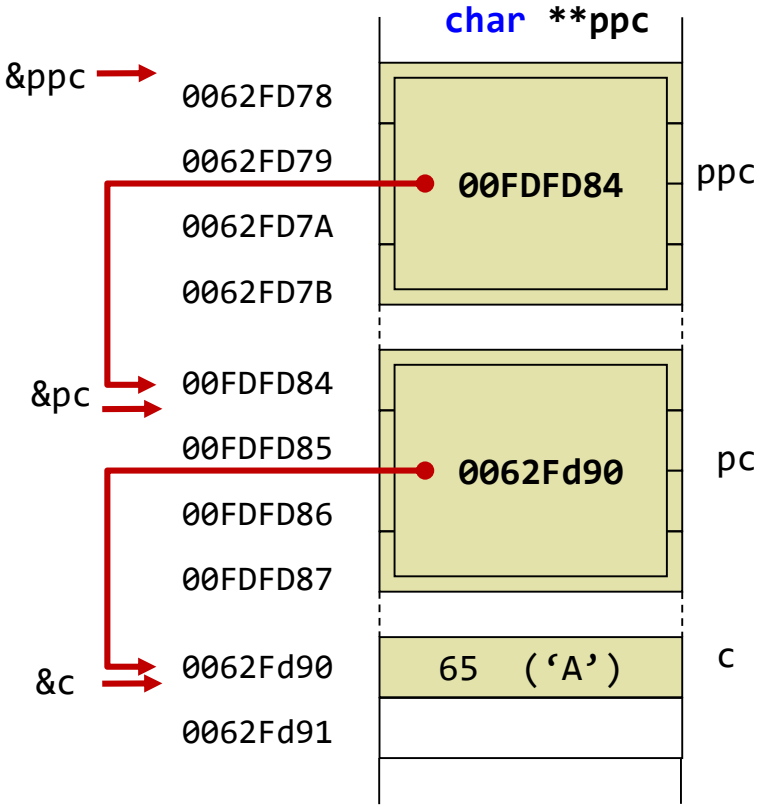

Arithmetic Operation for Pointer

- How does the char pointer work?

```c
#include <stdio.h>

int main()
{
  char c = 'A';
  char* pc = &c;
  char** ppc = &pc;

  printf("%p %p\n", pc, ppc);
  printf("%p %p\n", pc + 1, ppc + 1);
  printf("%p %p\n", &c, &c + 1);
  printf("%p %p\n", &pc, &ppc);
  printf("%p %p\n", &pc + 1, &ppc + 1);

  return 0;
}
```

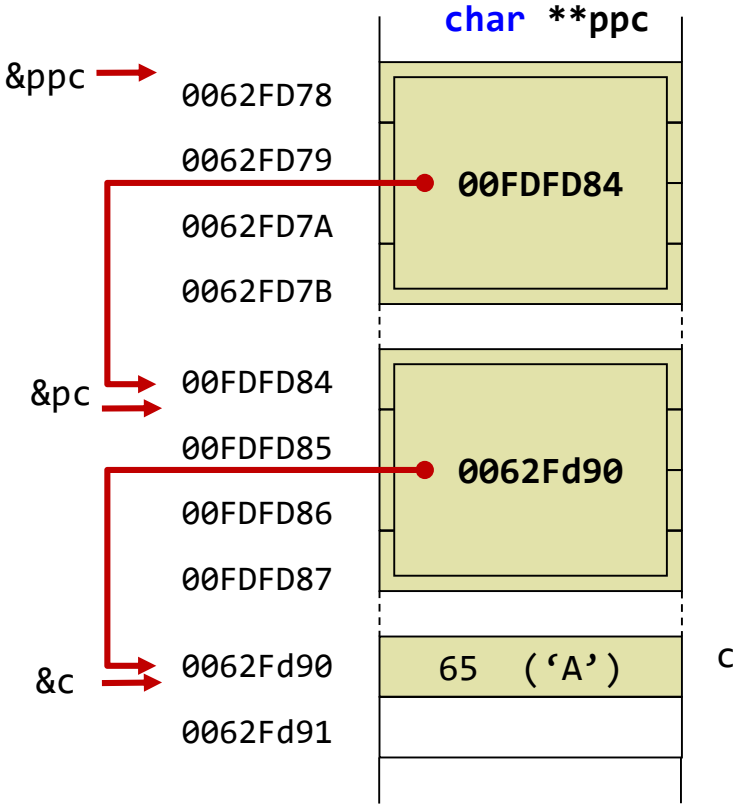

Arithmetic Operation for Pointer

- How does the int pointer work?

```c
#include <stdio.h>

int main()
{
  int n = 10;
  int* pn = &n;
  int** ppn = &pn;

  printf("%p %p\n", pn, ppn);
  printf("%p %p\n", pn + 1, ppn + 1);
  printf("%p %p\n", &n, &n + 1);
  printf("%p %p\n", &pn, &ppn);
  printf("%p %p\n", &pn + 1, &ppn + 1);

  return 0;
}
```

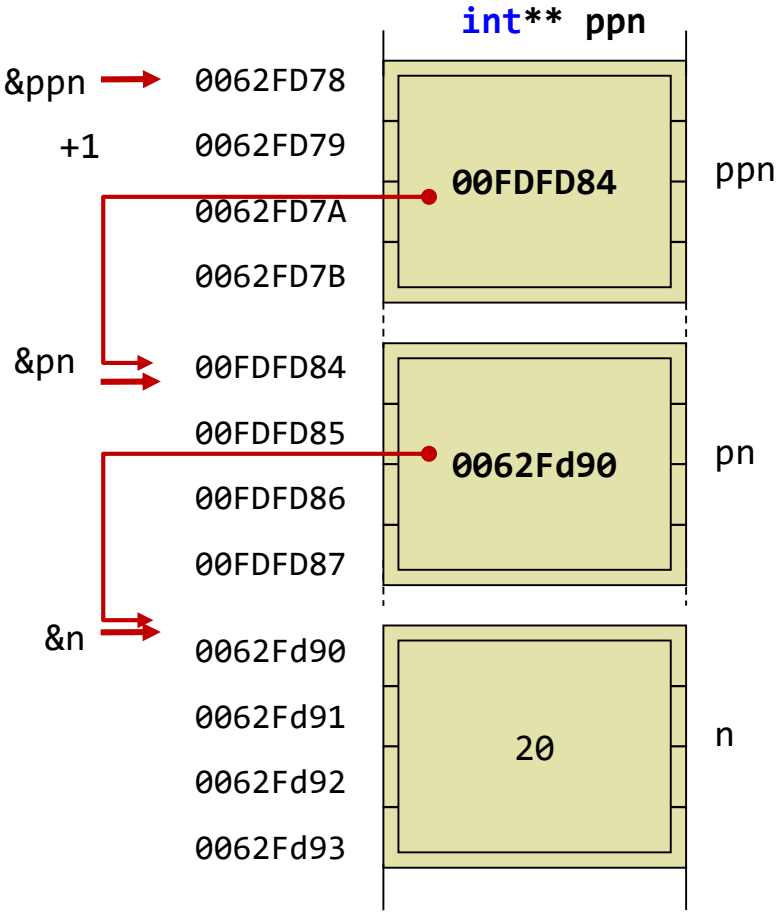

Array and Pointer

- The pointer to the first element of the array can be used as the name of the array.

```c
#include <stdio.h>

int main()
{
  int a[6] = { 5, 3, 1, 2, 4, 6 };
  int* pa = a;

  printf("%d %d\n", *a, *pa);
  printf("%p %p\n", a, pa);
  printf("%p %p\n", &a, &pa);

  printf("%d %d\n", a[0], pa[0]);
  printf("%d %d\n", a[1], pa[1]);
  return 0;
}
```

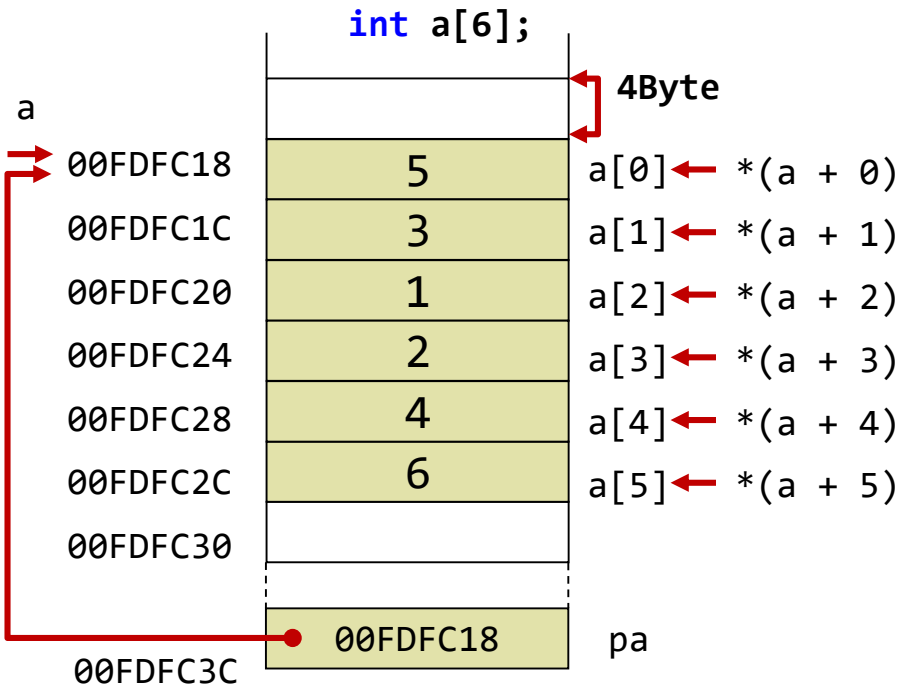

Example: Array and Pointer

- Is it a correct code?

```c
#include <stdio.h>

int main()
{
    int a[6] = { 1, 2, 3, 4, 5, 6 };
    int *pend = a + 6;
    int *pi = NULL;

    for (pi = a; pi < pend; pi++)
        printf("%d\n", *pi);

    return 0;
}
```

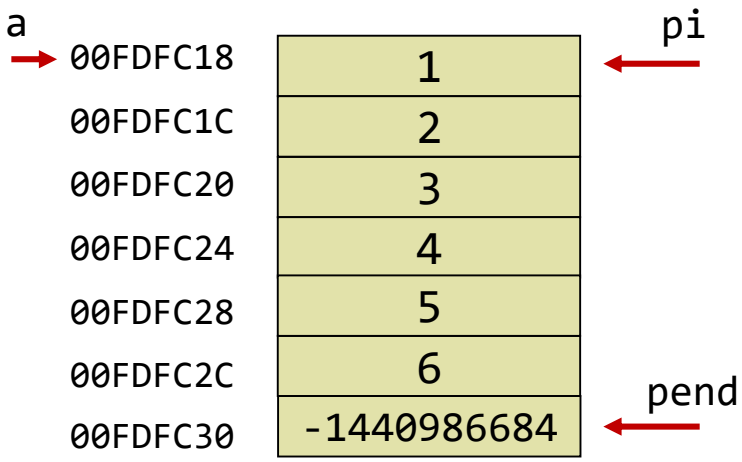

Example: Array and Pointer

- Print the smallest array value using pointers.

```c
#include <stdio.h>
int main()
{
    int a[6] = { 32, 12, 31, 42, 15, 24 };
    int *pend = a + 6;
    int *psmallest = a;
    int *pi = NULL;

    for (pi = a; pi < pend; pi++)
    {
        if (*pi < *psmallest)
            psmallest = pi;
    }
    printf("%d", *psmallest);
    return 0;
}
```

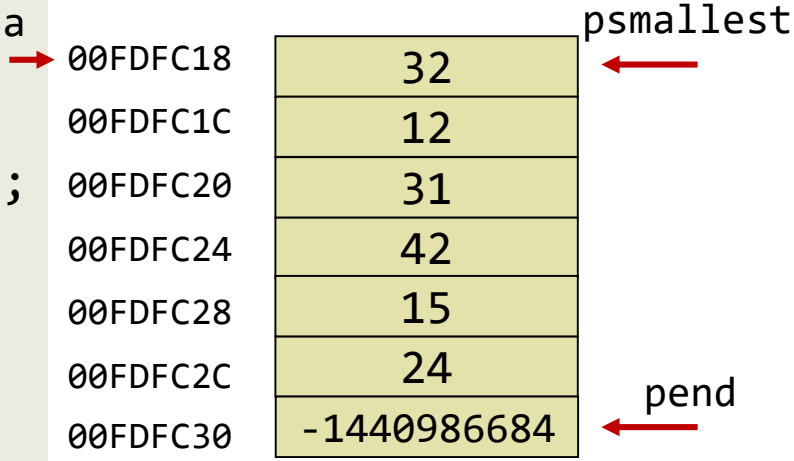

Passing Array to Function

- Passing a pointer (instead of an array) to a function

```c
#include <stdio.h>
void printArray(int* pa, int len);

int main()
{
    int a[5] = { 5, 3, 2, 1, 4 };
    printArray(a, 5);
    return 0;
}

void printArray(int* pa, int len)
{
    int i;
    for (i = 0; i < len; i++)
        printf("%d\n", pa[i]);
}
```

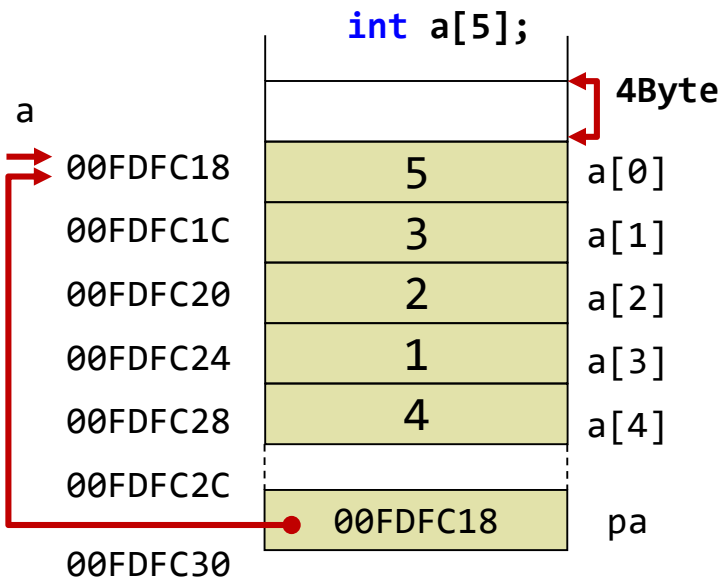

Example: Passing Array to Function

- Multiplying 4 for each element in an array

```c
#include <stdio.h>
void multiply4(int* pa, int len);

int main()
{
  int a[5] = { 5, 3, 2, 1, 4 }, i;
  multiply4(a, 5);
  for (i = 0; i < 5; i++)
    printf("%d\n", a[i]);
  return 0;
}
void multiply4(int* pa, int len)
{
  int i;
  for (i = 0; i < len; i++)
    pa[i] = pa[i] * 4;
}
```

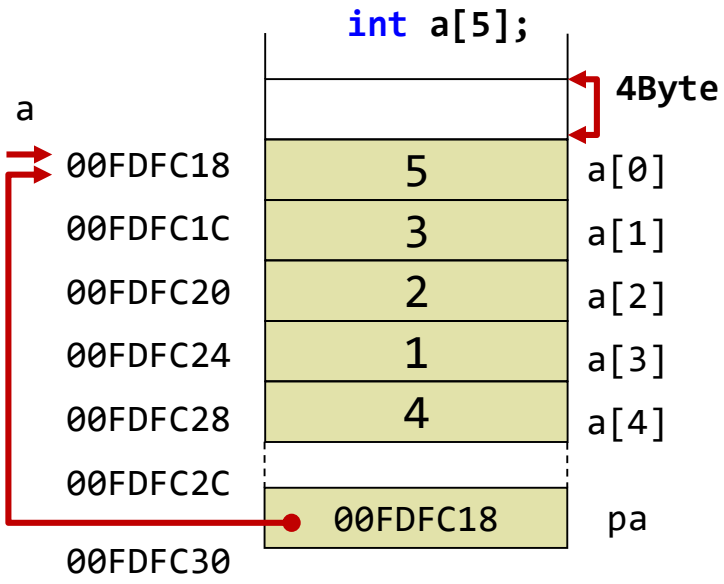

How to Use Memory in C

- Conceptual view of memory used in C program

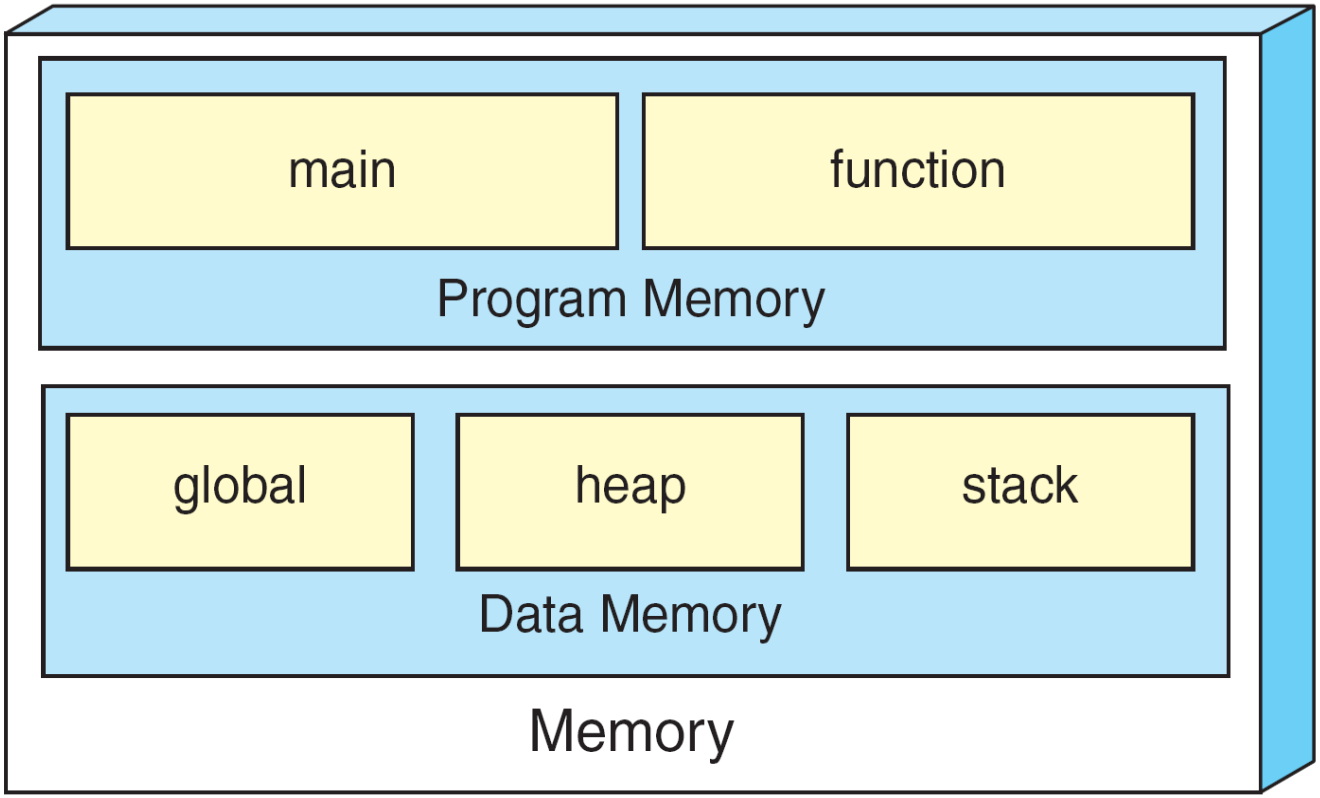

Dynamic Memory Allocation

```c
#include <stdio.h>
#include <stdlib.h>

int main()
{
    int size, i;
    scanf("%d", &size);
    // Allocate dynamic memory
    int* pn = malloc(sizeof(int)* size);
    for (i = 0; i < size; i++)
        scanf("%d", &pn[i]);

    for (i = 0; i < size; i++)
        printf("%d\n", pn[i]);

    free(pn); // Release memory

    return 0;
}
```

Dynamic Memory Allocation

- Is it a correct code?

```c
#include <stdio.h>
#include <stdlib.h>

int *genNumbers(int size);

int main()
{
    int size, i;
    scanf("%d", &size);

    int *pn = genNumbers(size);
    for (i = 0; i < size; i++)
        printf("%d\n", pn[i]);

    return 0;
}
```

```c
int *genNumbers(int size)
{
    int i;
    int *pn = malloc(4 * size);
    for (i = 0; i < size; i++)
        scanf("%d", &pn[i]);

    return pn;
}
```

Memory Leak

- It occurs when a computer program incorrectly manages memory allocations.
  - Memory that is **no longer used** is not **released yet**.

Solving Memory Leak

- Use a pair of allocation and deallocation together!

```c
#include <stdio.h>
#include <stdlib.h>
void genNumbers(int* pn, int s);

int main()
{
    int size, i;
    scanf("%d", &size);
    int* pn = malloc(4 * size);

    genNumbers(pn, size);
    for (i = 0; i < size; i++)
        printf("%d\n", pn[i]);

    free(pn);
    return 0;
}
```

```c
void genNumbers(int* pn, int s)
{
    int i;
    for (i = 0; i < s; i++)
        scanf("%d", &pn[i]);
}
```

What is Structure?

- Definition
  - A collection of multiple related elements
  - A single name including possibly several different types

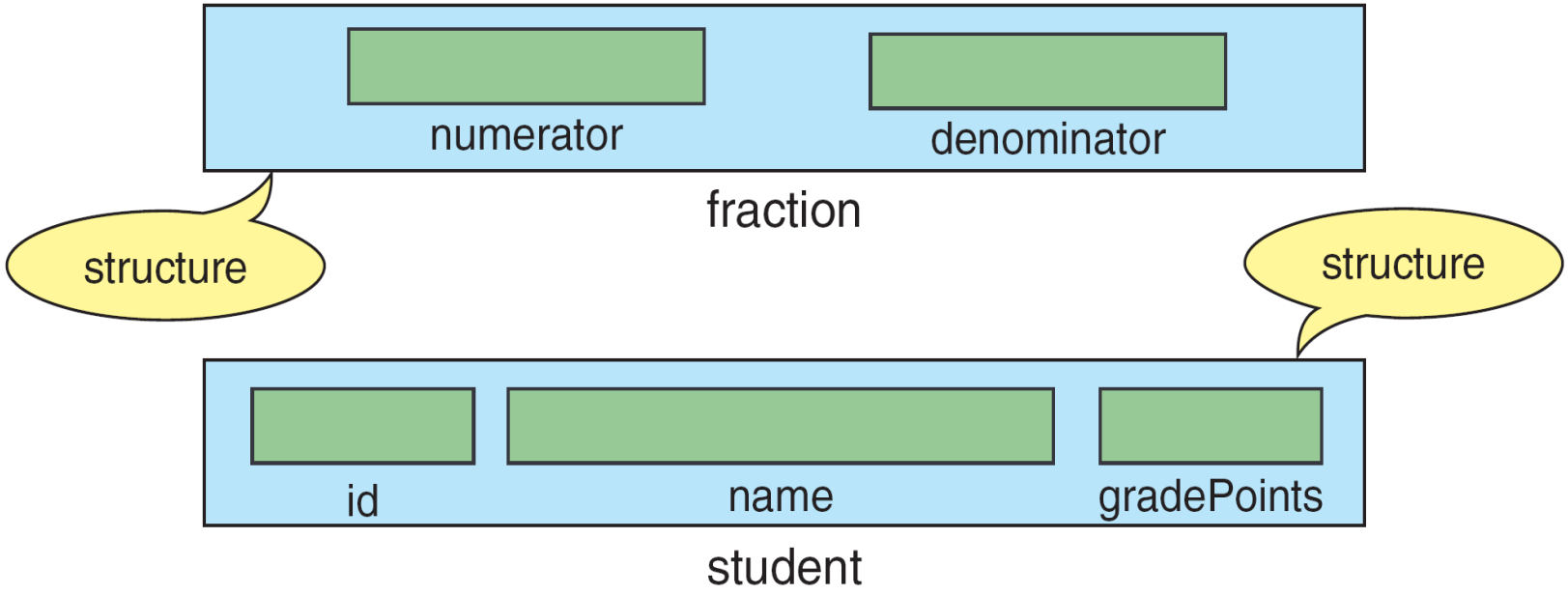

What is Structure?

- How to declare a structure
  - All elements in the structure should be related **logically**.

```c
#include <stdio.h>
typedef struct
{
    char name[10];
    int scores[3];
} STUDENT;

int main()
{
    STUDENT s1 = { "Alice", 80, 70, 60 };

    printf("%s\n", s1.name);
    for (int i = 0; i < 3; i++)
        printf("%d\n", s1.scores[i]);
    return 0;
}
```

-> (Arrow) Operator

- It is used to access the value of a structure pointer.

```
#include <stdio.h>
typedef struct
{
    char name[10];
    int scores[3];
} STUDENT;

int main()
{
    STUDENT s1 = { "Alice", 80, 70, 60 };
    STUDENT* s2 = &s1;

    printf("%s\n", s2->name);
    for (int i = 0; i < 3; i++)
        printf("%d\n", s2->scores[i]);
    return 0;
}
```

Example: Structure

- Is it a correct code?

```c
int main()
{
    STUDENT stu[1];
    for (int i = 0; i < 1; i++) {
        scanf("%s", stu[i].name);
        for (int j = 0; j < 3; j++) {
            scanf("%d", &stu[i].scores[j]);
            stu[i].total += stu[i].scores[j];
        }
    }
    for (int i = 0; i < 1; i++) {
        printf("%s\n", stu[i].name);
        for (int j = 0; j < 3; j++)
            printf("%d\n", stu[i].scores[j]);
        printf("%d\n", stu[i].total);
    }
    return 0;
}
```

```c
typedef struct
{
    char name[10];
    int scores[3];
    int total;
} STUDENT;
```

Example: Structure

- Structure with dynamic memory allocation

```c
int main()
{
    int n;
    scanf("%d", &n);

    STUDENT* s = malloc(sizeof(STUDENT)*n);
    for (int i = 0; i < n; i++) {
        scanf("%s", s[i].name);
        s[i].total = 0;
        for (int j = 0; j < 3; j++) {
            scanf("%d", &s[i].scores[j]);
            s[i].total += s[i].scores[j];
        }
    }
    free(s);
    return 0;
}
```

```c
typedef struct
{
    char name[10];
    int scores[3];
    int total;
} STUDENT;
```

Example: Structure

- Multiplying two fractions

```
#include <stdio.h>

int main()
{
    FRACTION f1 = { 4, 5 };
    FRACTION f2 = { 3, 7 };
    FRACTION f3;

    f3.numerator = f1.numerator * f2.numerator;
    f3.denominator = f1.denominator * f2.denominator;


    printf("%d / %d", f3.numerator, f3.denominator);
    return 0;
}
```

```
typedef struct
{
int numerator;
int denominator;
} FRACTION;
```

Example: Structure

- Summing two fractions

```
#include <stdio.h>

int main()
{
    FRACTION f1 = { 4, 5 };
    FRACTION f2 = { 3, 7 };
    FRACTION f3;

    f3.numerator = f1.numerator * f2.denominator;
    f3.numerator += f2.numerator * f1.denominator;
    f3.denominator = f1.denominator * f2.denominator;

    printf("%d / %d", f3.numerator, f3.denominator);
    return 0;
}
```

```
typedef struct
{
int numerator;
int denominator;
} FRACTION;
```

How to Be a Good Programmer

- Tips for programming
  - https://www.oreilly.com/ideas/7-ways-to-be-a-better-programmer-in-2014
- Websites for Coding Exercises
  - Euler project: http://euler.synap.co.kr/
  - Backjoon online judge: https://www.acmicpc.net/
  - Algospot: https://www.algospot.com/judge/problem/list/