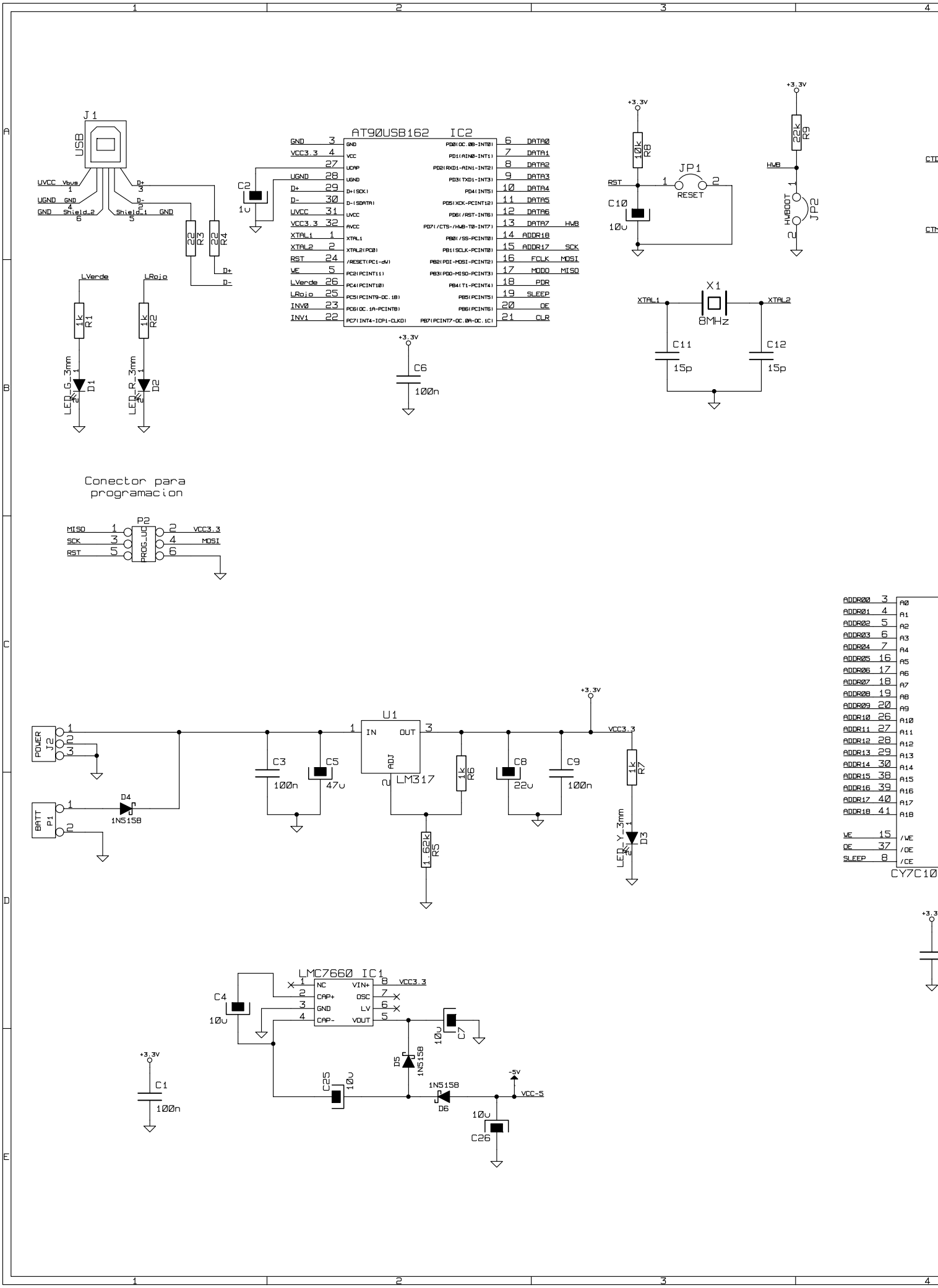
J1
USB
UVCC Vbus 1
UGND GND 4
GND Shield_2 6
D+ 3
D- 2
Shield_1 GND 5
22 R3
22 R4
D+
D-
LVerde
LRojo
1k R1
1k R2
LED_G_3mm D1
LED_R_3mm D2
AT90USB162 IC2
GND 3
VCC3.3 4
27 UCAP
UGND 28
D+ 29
D- 30
UVCC 31
VCC3.3 32
XTAL1 1
XTAL2 2
RST 24
WE 5
LVerde 26
LRojo 25
INV0 23
INV1 22
VCC
UGND
D+(SCK)
D-(SDATA)
UVCC
AVCC
XTAL1
XTAL2(PC0)
/RESET(PC1-dW)
PC2(PCINT11)
PC4(PCINT10)
PC5(PCINT9-OC.1B)
PC6(OC.1A-PCINT8)
PC7(INT4-ICP1-CLKO)
PD0(OC.0B-INT0)
PD1(AIN0-INT1)
PD2(RXD1-AIN1-INT2)
PD3(TXD1-INT3)
PD4(INT5)
PD5(XCK-PCINT12)
PD6(/RST-INT6)
PD7(/CTS-/HWB-T0-INT7)
PB0(/SS-PCINT0)
PB1(SCLK-PCINT0)
PB2(PDI-MOSI-PCINT2)
PB3(PDO-MISO-PCINT3)
PB4(T1-PCINT4)
PB5(PCINT5)
PB6(PCINT6)
PB7(PCINT7-OC.0A-OC.1C)
6 DATA0
7 DATA1
8 DATA2
9 DATA3
10 DATA4
11 DATA5
12 DATA6
13 DATA7 HWB
14 ADDR18
15 ADDR17 SCK
16 FCLK MOSI
17 MODO MISO
18 PDR
19 SLEEP
20 OE
21 CLR
C2
1u
C6
100n
+3.3V
10k R8
RST
JP1
RESET
C10
10u
22k R9
HWB
HWBOOT
JP2
X1
8MHz
XTAL1
XTAL2
C11
15p
C12
15p
Conector para programacion
P2
PROG_uC
MISO 1
SCK 3
RST 5
2 VCC3.3
4 MOSI
6
POWER J2
BATT P1
D4
1N5158
U1
IN
OUT
ADJ
LM317
C3
100n
C5
47u
1k R6
1.62k R5
C8
22u
C9
100n
VCC3.3
1k R7
LED_Y_3mm D3
ADDR00 3 A0
ADDR01 4 A1
ADDR02 5 A2
ADDR03 6 A3
ADDR04 7 A4
ADDR05 16 A5
ADDR06 17 A6
ADDR07 18 A7
ADDR08 19 A8
ADDR09 20 A9
ADDR10 26 A10
ADDR11 27 A11
ADDR12 28 A12
ADDR13 29 A13
ADDR14 30 A14
ADDR15 38 A15
ADDR16 39 A16
ADDR17 40 A17
ADDR18 41 A18
WE 15 /WE
OE 37 /OE
SLEEP 8 /CE
CY7C10
LMC7660 IC1
NC
CAP+
GND
CAP-
VIN+
OSC
LV
VOUT
C4
10u
C7
10u
D5
1N5158
C25
10u
1N5158
D6
-5V
VCC-5
C26
10u
C1
100n

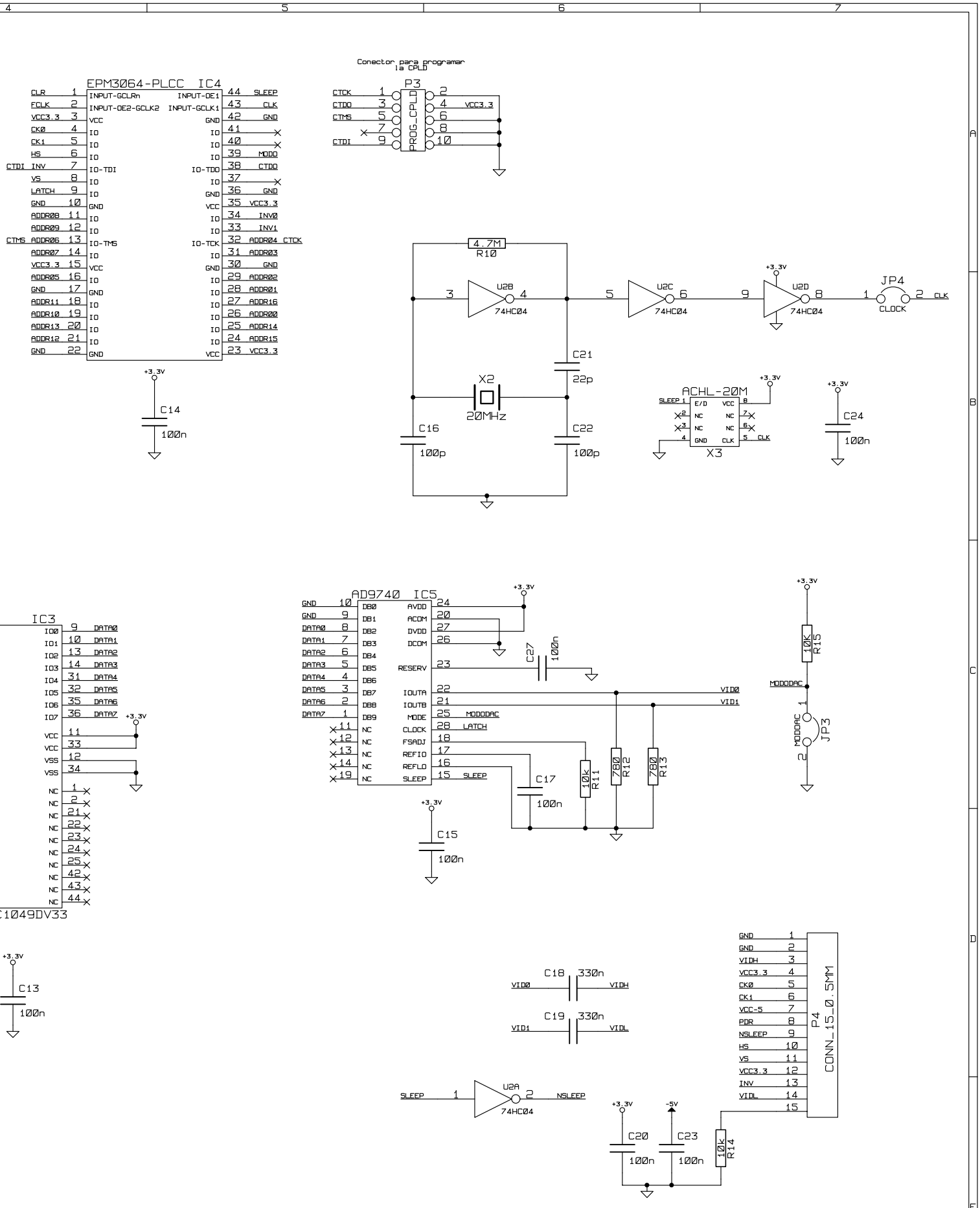

File: Controladora.sch		
Sheet: /		
Title:		
Size: A3	Date: 19 may 2009	Rev:
KiCad E.D.A. EESchema (20090216-final)		Id: 1/1