User's Manual and Technical Specifications

sweep v1.0
scanning laser range finder

- ✓ Cost efficient design
- ✓ Operates in full sunlight
- ✓ Low power consumption
- ✓ Wide field of view
- ✓ Small footprint
- ✓ Simple serial connectivity
- ✓ Long Range

⚠ CAUTION

Laser Safety

This device contains a component which emits laser radiation. The laser product is designated Class 1 during all operating modes. This means that the laser is safe to look at with the unaided eye, however it is advisable to not look directly into the beam when in use.

Power Safety

When connecting a Sweep sensor to a 5VDC power source, it should be limited to a maximum of 8A as defined in EN 60950-1, sub clause 2.5, Table 2B.

Documentation Revision Information

Rev	Date	Changes
0.9	12/19/2016	Initial Release
0.91	01/05/2016	Added MS, LR, LI Packets
0.92	01/06/2017	Added power safety text

Table of Contents

Laser Safety 0
Power Safety 0
Specifications 1
Physical 1
Electrical 1
Measurement Performance 1
Field of View 1
Measurement Error Test Data 1
Overview of Interfaces 2
Connector 2
Mounting and Vibration Considerations 2
Mounting Features and Orientation 3
Ingress Protection Rating 3
Enclosure Window Design 3
Theory of Operation 3
Distance Measurement 3
Angle Measurement 3
Applications 4
Internal Filters 4
Visualizer Overview 4
Serial Protocol Specification 4
Data Encoding and Decoding 4
Communication Format 4
Available Command Codes 4
General Communication Packet Structure 5
Definition of terms: 5
DS - Start data acquisition 5
DX - Stop data acquisition 6
MS - Adjust Motor Speed 6
MS – Adjust Motor Speed 7
LR – Adjust LiDAR Sample Rate 7
LI – LiDAR Information 7
MI – Motor Information 7
IV - Version Details 8
ID - Device Info 8
RR - Reset Device 8

Downloaded from www.Manualslib.com manuals search engine

Specifications

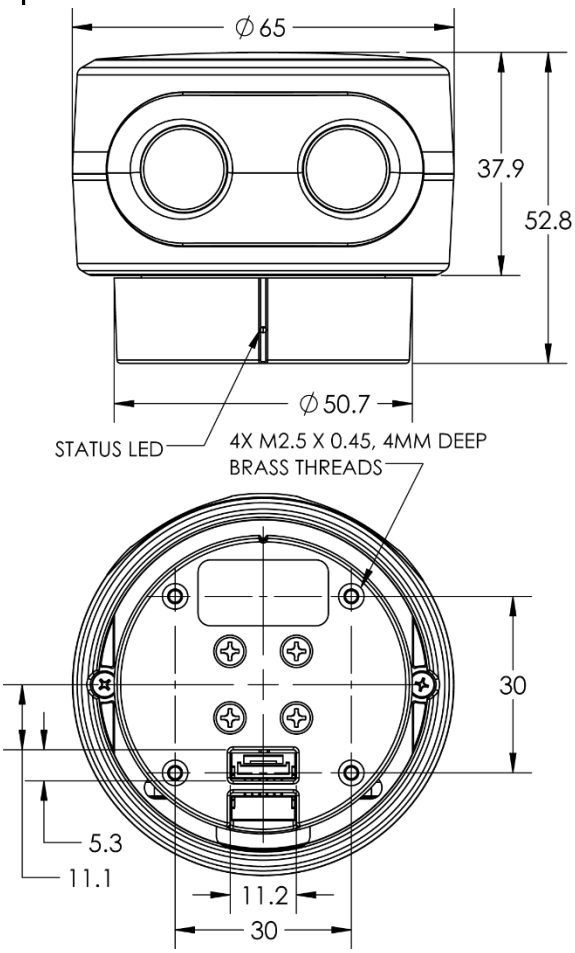

ALL DIMENSIONS ARE IN MM, DRAWINGS ARE NOT TO SCALE

Figure 1, Sweep Dimension Drawing

Physical

Specification	Value
Weight	120 g (4.23 oz.)
Operating Temperature	-10 to 60° C (14 to 140°F)
Storage Temperature	-40 to 80° C (-40 to 176°F)

Electrical

Specification	Value
Power	5VDC ±0.5Vdc
Current Consumption	Up to 650mA 450mA nominal

Measurement Performance

Specification	Value
Range (75% reflective target)	40 m (131ft)
Resolution	1 cm (0.4 in)
Update Rate (75% reflective target)	Up to 1075Hz (see "Theory of Operation")

Field of View

Specification	Value
Horizontal Field of View	360 degrees
Vertical Field of View	0.5 degrees

Sweep is a single plane scanner. This means that as its head rotates **counterclockwise**, it records data in a single plane. The beam starts out at approximately 12.7mm in diameter and expands by approximately 0.5 degrees as show in Figure 2.

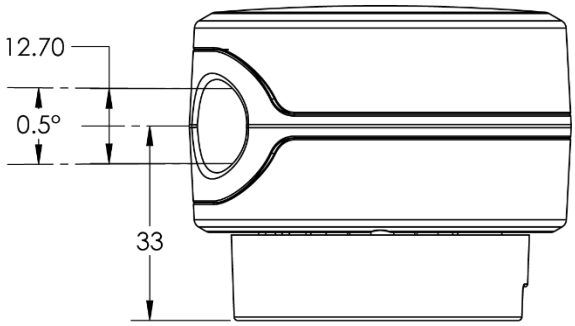

ALL DIMENSIONS ARE IN MM, DRAWING IS NOT TO SCALE

Figure 2, Sweep Field of View

Measurement Error Test Data

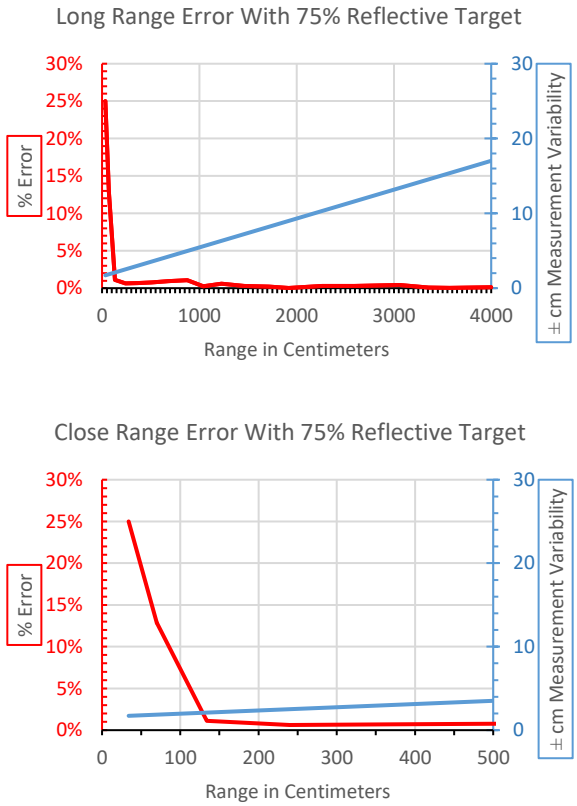

Figure 3, Sweep Accuracy Graphs

Copyright ©2014-2017 Scanse LLC - www.scanse.io

Downloaded from www.Manualslib.com manuals search engine

Overview of Interfaces

Sweep can be connected to low level micro controllers directly using its serial port, or to a PC using the provided USB to serial converter.

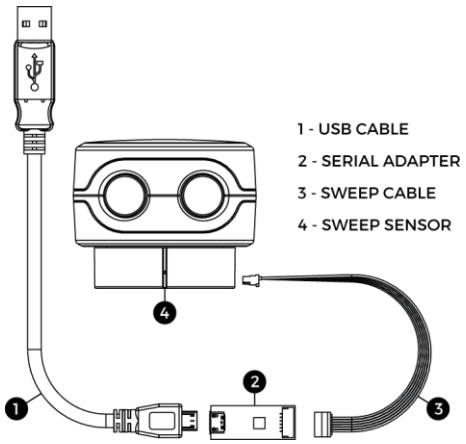

Figure 4, Sweep Cable Diagram

Connector

Sweep has two serial port connectors with identical signals. This allows for more mounting options.

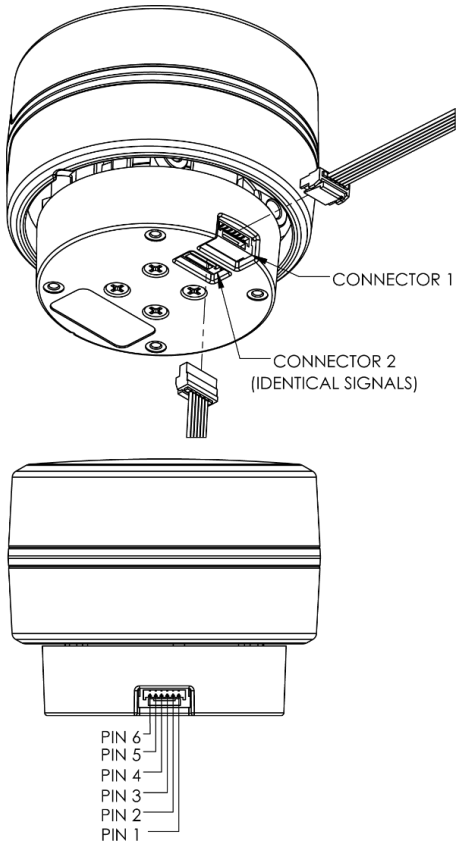

DRAWINGS ARE NOT TO SCALE

Figure 6, Sweep Connector Diagram

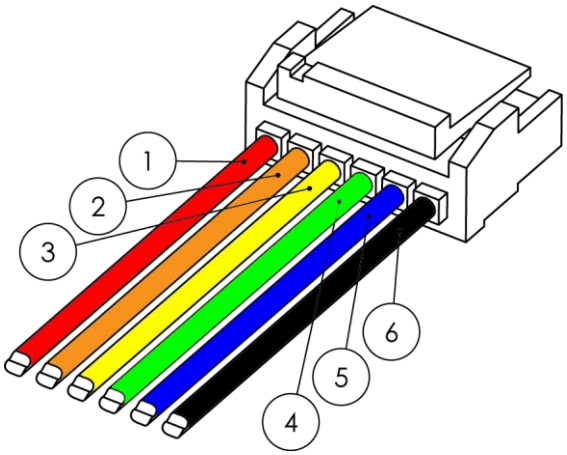

Figure 5, Sweep Pigtail Cable Connector Detail

Pin	Color	Function
1	Red	5 Vdc (+) (minimum 0.5A capable)
2	Orange	Power enable (internal pull-up)
3	Yellow	Sync/Device Ready
4	Green	UART RX 3.3V (5V compatible)
5	Blue	UART TX 3.3V (5V compatible)
6	Black	Ground (-)

You can create your own cable if needed for your application. These components are readily available.

Part	Description	Mfg.	Part No.
Connector Housing	6-Position, rectangular housing, latch-lock connector receptacle with 1.25 mm (0.049 in.) pitch.	JST	GHR-06V-S
Connector terminal	26-30 AWG crimp socket connector	JST	SSHL-002T-P0.2
Wire	UL 1061 26 AWG stranded copper	N/A	N/A

Mounting and Vibration Considerations

Sweep can be mounted in any orientation. Sweep's rotating head is dynamically balanced, which means it is immune to linear vibration, but it can be affected by rotational vibration. Sudden rotational shocks can cause the head to either slow down or speed up, which can affect data accuracy. If Sweep is rotationally jerked hard enough, it can cause the motor to lose sync, which will trigger a momentary motor pause, and then restart.

Copyright ©2014-2017 Scanse LLC - www.scanse.io

Downloaded from www.Manualslib.com manuals search engine

Mounting Features and Orientation

Sweep has four brass threaded inserts designed to fit M2.5X0.45 screws in its base. These are the best features for mounting Sweep to an application. The screw holes are aligned with the scanner's measurement angles. The scanner's zero degree starting angle is aligned with the status LED, as shown in Figure 7.

Ingress Protection Rating

Sweep is rated as IP51, which is to say, it is not dust or water tight. It is recommended that Sweep be placed inside a protective transparent enclosure if it will be used in dusty or wet environments.

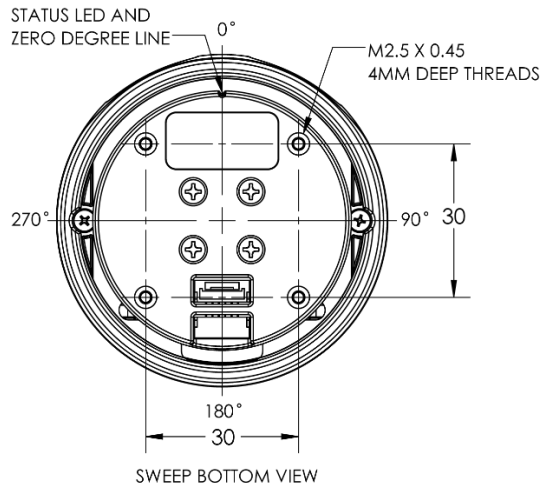

Figure 7, Sweep Mounting Features (all dimensions in mm)

Enclosure Window Design

Sweep uses 905nm laser light, which passes through several kinds of clear glass and plastic very well. Based on our testing, clear Polycarbonate plastic is one of the best choices, as it can be molded to fit the profile of the application's enclosure, is very inexpensive, and in most cases, is more than 95% translucent to Sweep's light beam. Factors that can affect the performance of a window are:

- Thickness of the window. Thicker windows will block more light, as well as bend the light more if the beam is not hitting the window normal to the surface.
- Scratches and dust. The presence of scratches and dust on the window will scatter the laser light, and may reflect some of the light back into the sensor's detector, causing measurement errors.
- Surface coatings. There are a variety of coatings that can help with the performance of windows. One is an anti-reflective (AR) coating, which can help reduce the amount of laser light that is reflected as it passes through the window's surface.

Theory of Operation

Distance Measurement

Sweep employs a time of flight ranging method. This technique involves transmitting a packet of micro pulses of light in a unique pattern. When this light bounces off an object and returns to the receiving detector, a correlation algorithm is used to identify the unique light pattern from ambient noise. **Each light packet is different from the last, which allows multiple Sweep sensors to operate adjacent to each other without interference**.

The light packets that Sweep uses can vary in length, which can affect accuracy of range measurements, as well as the maximum range and update rate. Under normal operation, Sweep limits the maximum time per measurement to a value determined by the sample rate set using the **LR** command (see LR packet structure description). If not enough light is returned from the environment, the measurement fails, and a 1 is returned as the range value. On the other hand, if allot of light is returned from the environment, the correlation algorithm can reach its maximum accuracy early, and can return a range value more quickly. This is what makes the update rate of Sweep variable. The value of setting a slower sample rate using the **LR** command, is that more light will be gathered from a target, and the range measurements will be more accurate. The exact accuracy is determined by many factors, including the target surface characteristics and ambient noise, so we cannot give an exact number for relative accuracy between the different **LR** settings.

Angle Measurement

Sweep uses an optical encoder to measure the angle of the rotating sensor head. The angle that is recorded for a range data point is the angle the sensor is at when the measurement is completed.

Copyright ©2014-2017 Scanse LLC - www.scanse.io

Downloaded from www.Manualslib.com manuals search engine

Applications

Sweep can be used for a variety of applications, including robot guidance/obstacle avoidance, 3D scanning, surveying, people tracking and many more.

Internal Filters

Sweep has the ability to perform some simple data filtering within the sensor itself. These filters are still in development, and are being made for specific customer segments. Examples include having Sweep split up its field of view into eight sections, then transmit only the closest objects within each of those sectors. Another example is to have Sweep only output data from a range of angles. **If you have an application that requires a specific filter, please contact us.**

Visualizer Overview

You can download the Sweep visualizer at www.scanse.io/downloads
The purpose of the Scanse visualizer is to provide a way to quickly evaluate Sweep's performance in your application/environment. For some applications, like surveying, our visualizer can be used to take quick measurements between range data points within a scan. It contains a programming tool for updating Sweep's firmware.

A full tutorial for using the visualizer can be found in software support section at support.scanse.io.

Serial Protocol Specification

Specification	Value
Bit Rate	115.2 Kbps
Parity	None
Data Bit	8
Stop Bit	1
Flow Control	None

Data Encoding and Decoding

All characters used for commands and responses are ASCII code in addition to CR and LF, except for the measurement packet.

Responses with float values are sent as 16bit integer values.
Example conversion:
angle_f = 1.0f * ((float)(angle_i >> 4) + ((angle_i & 15) / 16.0f));

Communication Format

All communication packets between the host computer and the sensor begin with ASCII letter command codes.

Available Command Codes

ASCII Code (2 bytes)	Function
DS	Start data acquisition
DX	Stop data acquisition
MS	Adjust Motor Speed
LR	Adjust LiDAR Sample Rate
MI	Motor Information
IV	Version Info
ID	Device Info
RR	Reset Device

Copyright ©2014-2017 Scanse LLC - www.scanse.io

Downloaded from www.Manualslib.com manuals search engine

General Communication Packet Structure

(HOST -> SENSOR)

Command with no parameter

Command Symbol (2 bytes)	Line Feed (LF)
Example: DS, DX, MS, MI, IV…	Line Feed (LF) or Carriage Return (CR)

or

Command with parameter

Command Symbol (2 bytes)	Parameter (2 bytes)	Line Feed (LF)

(SENSOR -> HOST)

Response with no parameter echoed

Command Symbol (2 bytes)	Status (2 bytes)	Sum of Status	Line Feed (LF)

or

Command with parameter echoed

Command Symbol (2 bytes)	Parameter (2 bytes)	Line Feed (LF)	Status (2 bytes)	Sum of Status	Line Feed (LF)

Definition of terms:

Command Symbol: 2 byte code at the beginning of every command.
Parameter: Information that is needed to change sensor settings.
Line Feed (LF) or Carriage Return (CR): Terminating code. Command can have LF or CR or both as termination code but reply will always have LF as its termination code.
Status: 2 bytes of data in reply that informs normal processing if command is authenticated or errors if undefined, invalid or incomplete command is received by sensor. Status other than 00 and 99 are error codes.
Sum of Status: 1 byte of data used in authentication. Calculated by adding status bytes, taking lower 6 byte of this sum and adding 30H to this sum.
Sum = 111111 = 3fH+30H = 6fH = o
Example: [LF] 0 0 [LF] = P
Responses to Invalid Commands: 11 -- Invalid parameter

DS - Start data acquisition

- Initiates scanning
- Responds with header containing status.
- Next responds with measurement packets indefinitely until commanded to stop.

(HOST -> SENSOR)

D	S	LF

(SENSOR -> HOST)

Header response

D	S	Status (2 bytes)	SUM (2 bytes)	LF

Data Block (7 bytes) Data Block

Sync/Error (1 byte)	Azimuth - degrees(float) (2 bytes)	Distance - cm(int) (2 bytes)	Signal Strength (1 byte)	Checksum (1 byte)

Copyright ©2014-2017 Scanse LLC - www.scanse.io

Downloaded from www.Manualslib.com manuals search engine

sync bit : 0 bit indicates the sync value, a value of 1 indicates the packet is the beginning of a new scan, a value of 0 indicates all other measurement packets. Bits 1-6 are reserved for error codes, see below.
error code bits : 1st bit indicates whether or not there was a communication error with the LiDAR Module. A value of 1 indicates that there was an error, and a value of 0 indicates there was no error.
bits 2-7 reserved for future use.
azimuth: Angle that ranging was recorded at. Azimuth is a float value - needs to be converted from 16bit int to float, use instructions at the top
distance: Distance of range measurement.
signal strength: Signal strength of current ranging measurement. Larger is better. Range: 0-255
checksum: Calculated by adding the 6 bytes of data then dividing by 255 and keeping the remainder. (Sum of bytes 0-6) % 255
Status
00 -- Command received without any Error
22 -- Stopped to verify error
55 -- Hardware trouble
99 -- Resuming operation

DX - Stop data acquisition

Stops outputting measurement data.
(HOST -> SENSOR)

D	X	LF

(SENSOR -> HOST)

D	X	Status	SUM	LF

MS - Adjust Motor Speed

Default Speed: Sensor stores last speed command in non-volatile memory, and will return to that speed after a power cycle, except if the last state was speed 00 (stopped).
(HOST -> SENSOR)

M	S	Speed Parameter (2 bytes)	LF

Speed Parameter: 00 - 10 : 10 different speed levels according to revolutions per second (Hz), increments of 1.
Example: 01,02,..
00 = Motor stopped

(SENSOR -> HOST)

M	S	Speed(Hz) (2 bytes)	LF	Status	Sum	LF

Copyright ©2014-2017 Scanse LLC - www.scanse.io

Downloaded from www.Manualslib.com manuals search engine

MS – Adjust Motor Speed

Default Speed: 5Hz

Once a speed is set, the sensor will always return to this speed, even after a power cycle (except when setting the speed to 0Hz – in which case it will go back to 5Hz after a power cycle).

(HOST -> SENSOR)

M	S	Speed Parameter (2 bytes)	LF

Speed Parameter: 00 - 10 : 10 different speed levels according to Hz, increments of 1. ie: 01,02,..

00 = Motor stopped.

(SENSOR -> HOST)

M	S	Speed(Hz) (2 bytes)	LF	Status	Sum	LF

LR – Adjust LiDAR Sample Rate

Default Sample Rate: 500-600Hz. See Theory of Operation section for explanation of why there is arrange of sample rate values.

(HOST -> SENSOR)

L	R	Speed Parameter (2 bytes)	LF

Sample Rate Parameter Code:

01 = 500-600Hz

02 = 750-800Hz

03 = 1000-1075Hz

(SENSOR -> HOST)

L	R	Speed(Hz) (2 bytes)	LF	Status	Sum	LF

LI – LiDAR Information

Returns current LiDAR Sample Rate Code

01 = 500-600Hz

02 = 750-800Hz

03 = 1000-1050Hz

(HOST -> SENSOR)

L	I	LF

(SENSOR -> HOST)

L	I	Speed(Hz) (2 bytes)	LF

MI – Motor Information

Returns current rotation frequency in Hz in ASCII 00 - 10 (increments of 1)

(HOST -> SENSOR)

M	I	LF

(SENSOR -> HOST)

M	I	Speed(Hz) (2 bytes)	LF

Copyright ©2014-2017 Scanse LLC - www.scanse.io

Downloaded from www.Manualslib.com manuals search engine

IV - Version Details

- Model
- Protocol Version
- Firmware Version
- Hardware Version
- Serial Number

(HOST -> SENSOR)

I	V	LF

(SENSOR -> HOST)

I	V	Model (5 bytes)	Protocol (2 bytes)	Firmware Version (2 bytes)	Hardware Version (1 byte)	Serial Number (8 bytes)	LF
Example: IVSWEEP01011100000001							
I	V	SWEEP	01	01	1	00000001	LF

ID - Device Info

- Bit Rate
- Laser State
- Mode
- Diagnostic
- Motor Speed
- Sample Rate

(HOST -> SENSOR)

I	D	LF

(SENSOR -> HOST)

I	D	Bit Rate (6 bytes)	Laser state	Mode	Diagnostic	Motor Speed (2 bytes)	Sample Rate (4 bytes)	LF
Example: IV115200110050500								
I	D	115200	1	1	0	05	0500	LF

RR - Reset Device

- Reset Scanner

(HOST -> SENSOR)

R	R	LF

(SENSOR -> HOST)

No Response

Copyright ©2014-2017 Scanse LLC - www.scanse.io

Downloaded from www.Manualslib.com manuals search engine