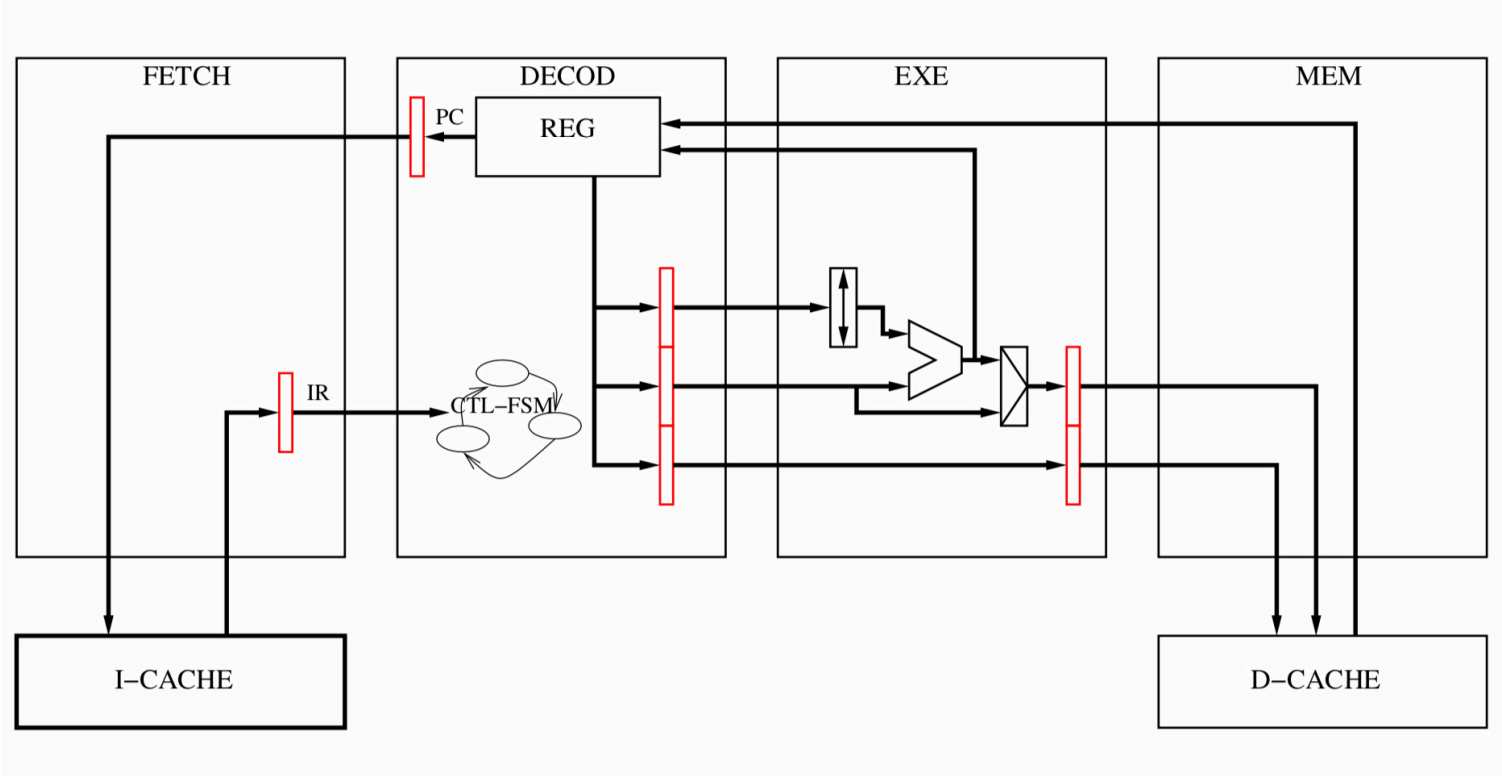
FETCH
DECOD
EXE
MEM
PC
REG
IR
CTL-FSM
I-CACHE
D-CACHE

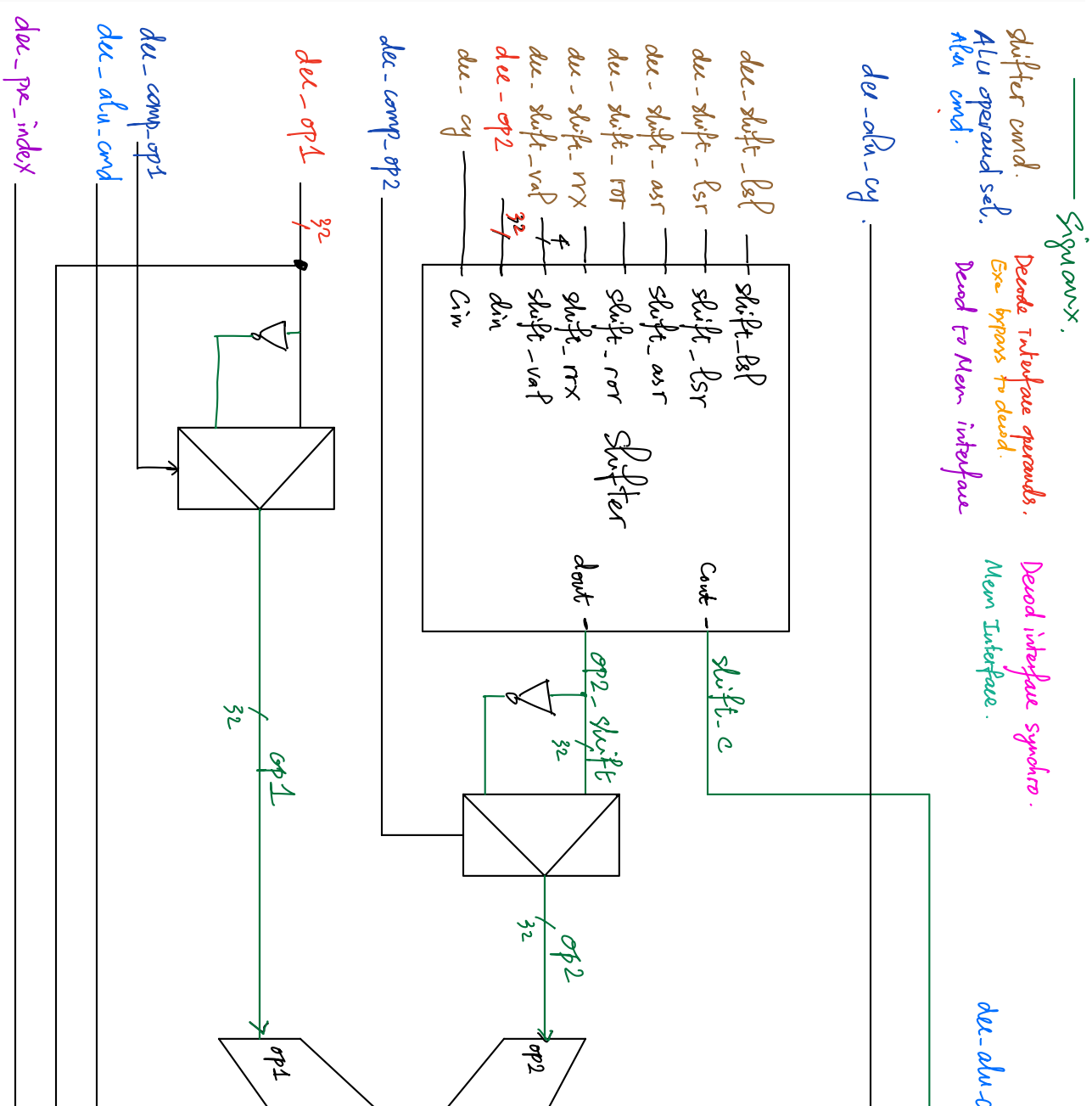
Signals.
shifter cmd.
ALU operand sel.
Alu cmd.
Decode Interface operands.
Exe bypass to decod.
Decod to Mem interface
Decod interface synchro.
Mem Interface.
dec_alu_cy.
dec_shift_lsl
dec_shift_lsr
dec_shift_asr
dec_shift_ror
dec_shift_rrx
dec_shift_val
dec_op2
dec_cy
shift_lsl
shift_lsr
shift_asr
shift_ror
shift_rrx
shift_val
din
Cin
Shifter
dout
Cout
shift_c
op2_shift
32
op2
op1
dec_comp_op2
dec_op1
dec_comp_op1
dec_alu_cmd
dec_pre_index
dec_alu_c

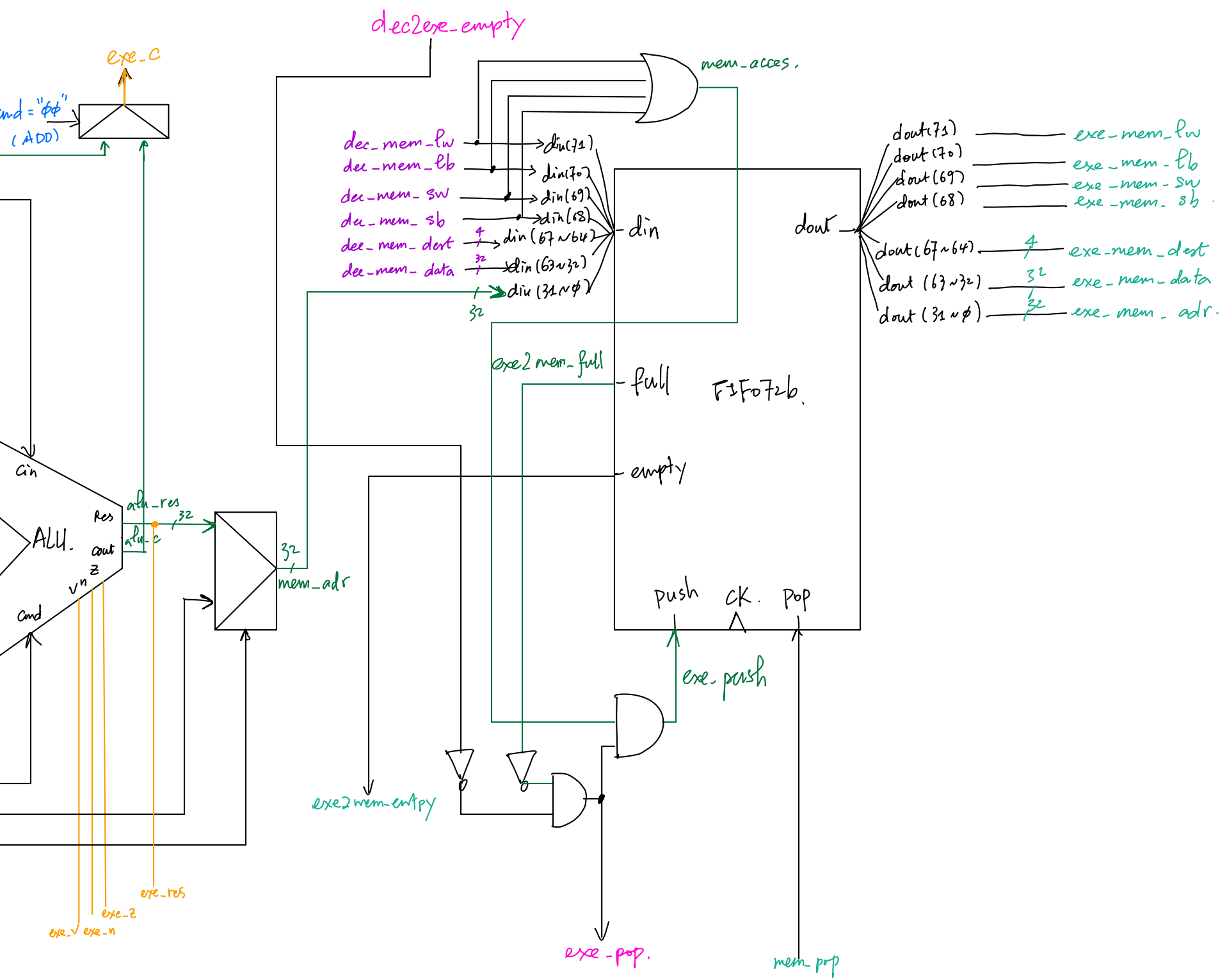
dec2exe_empty
exe_c
cmd = "00" (ADD)
mem_acces.
dec_mem_lw
dec_mem_lb
dec_mem_sw
dec_mem_sb
dec_mem_dest
dec_mem_data
din(71)
din(70)
din(69)
din(68)
din(67~64)
din(63~32)
din(31~0)
din
dout
dout(71)
dout(70)
dout(69)
dout(68)
dout(67~64)
dout(63~32)
dout(31~0)
exe_mem_lw
exe_mem_lb
exe_mem_sw
exe_mem_sb
exe_mem_dest
exe_mem_data
exe_mem_adr.
exe2mem_full
full
FIFO72b.
empty
Cin
ALU.
Res
Cout
Z
Vn
Cmd
alu_res
alu_c
32
mem_adr
push
CK.
Pop
exe_push
exe2mem_empty
exe_pop.
mem_pop
exe_res
exe_z
exe_n
exe_v