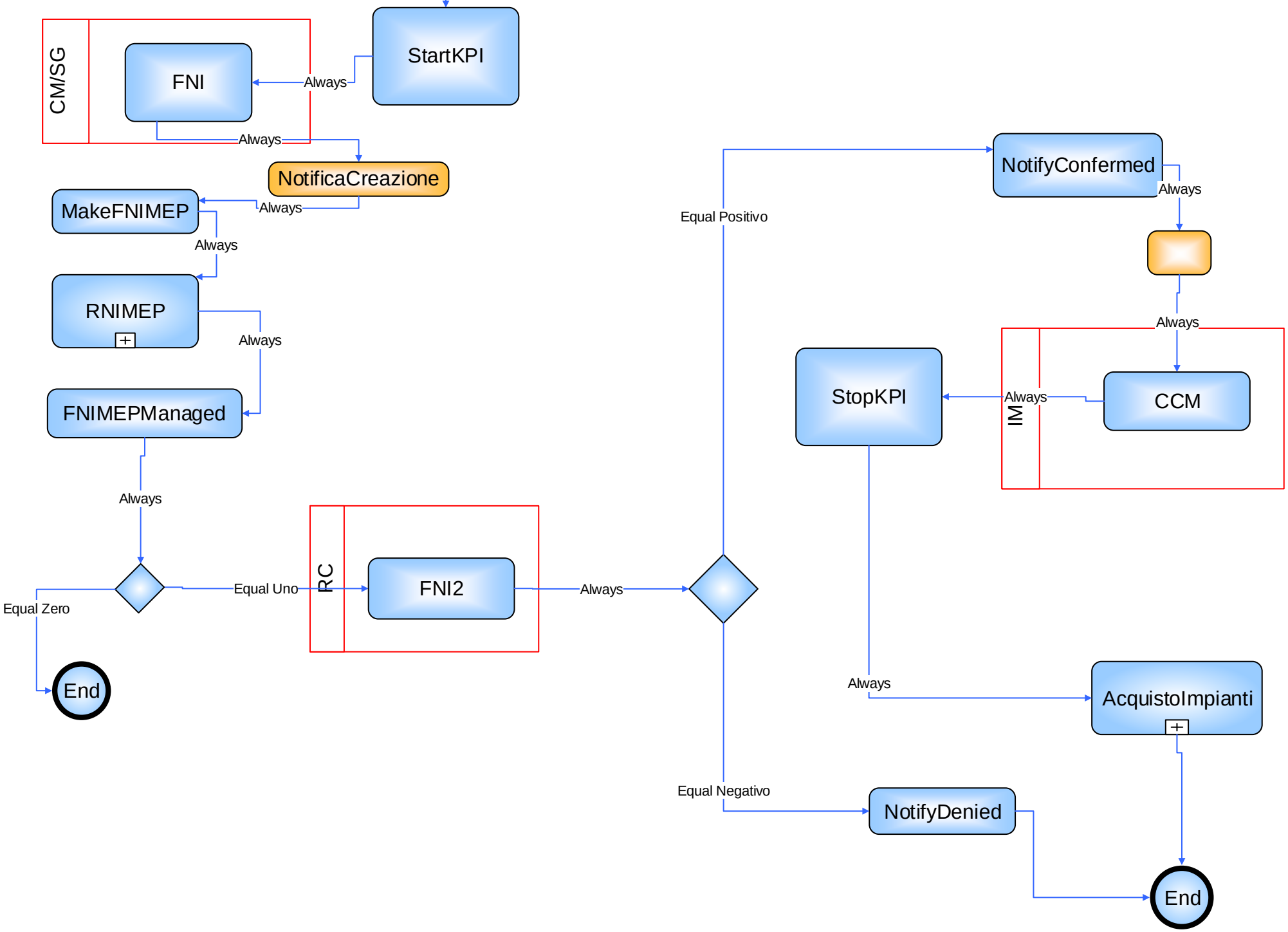
CM/SG
FNI
Always
StartKPI
Always
NotificaCreazione
Always
MakeFNIMEP
Always
RNIMEP
Always
FNIMEPManaged
Always
Equal Zero
Equal Uno
End
RC
FNI2
Always
Equal Positivo
NotifyConfermed
Always
Always
IM
Always
CCM
StopKPI
Always
AcquistoImpianti
Equal Negativo
NotifyDenied
End

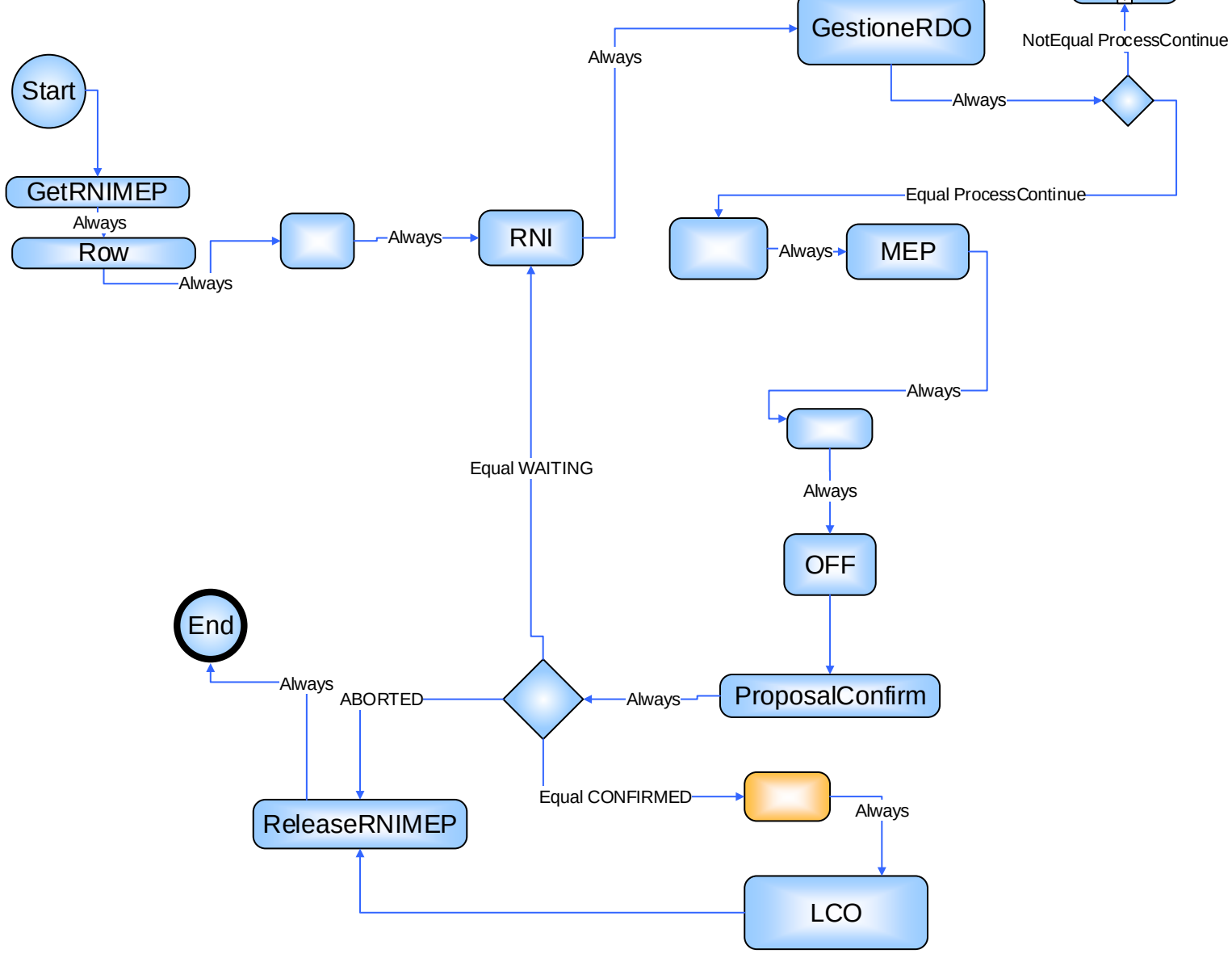
Start
GetRNIMEP
Always
Row
Always
Always
RNI
Always
GestioneRDO
Always
NotEqual ProcessContinue
Always
Equal ProcessContinue
Always
MEP
Always
Always
OFF
Equal WAITING
End
Always
ABORTED
Always
ProposalConfirm
Equal CONFIRMED
Always
ReleaseRNIMEP
LCO

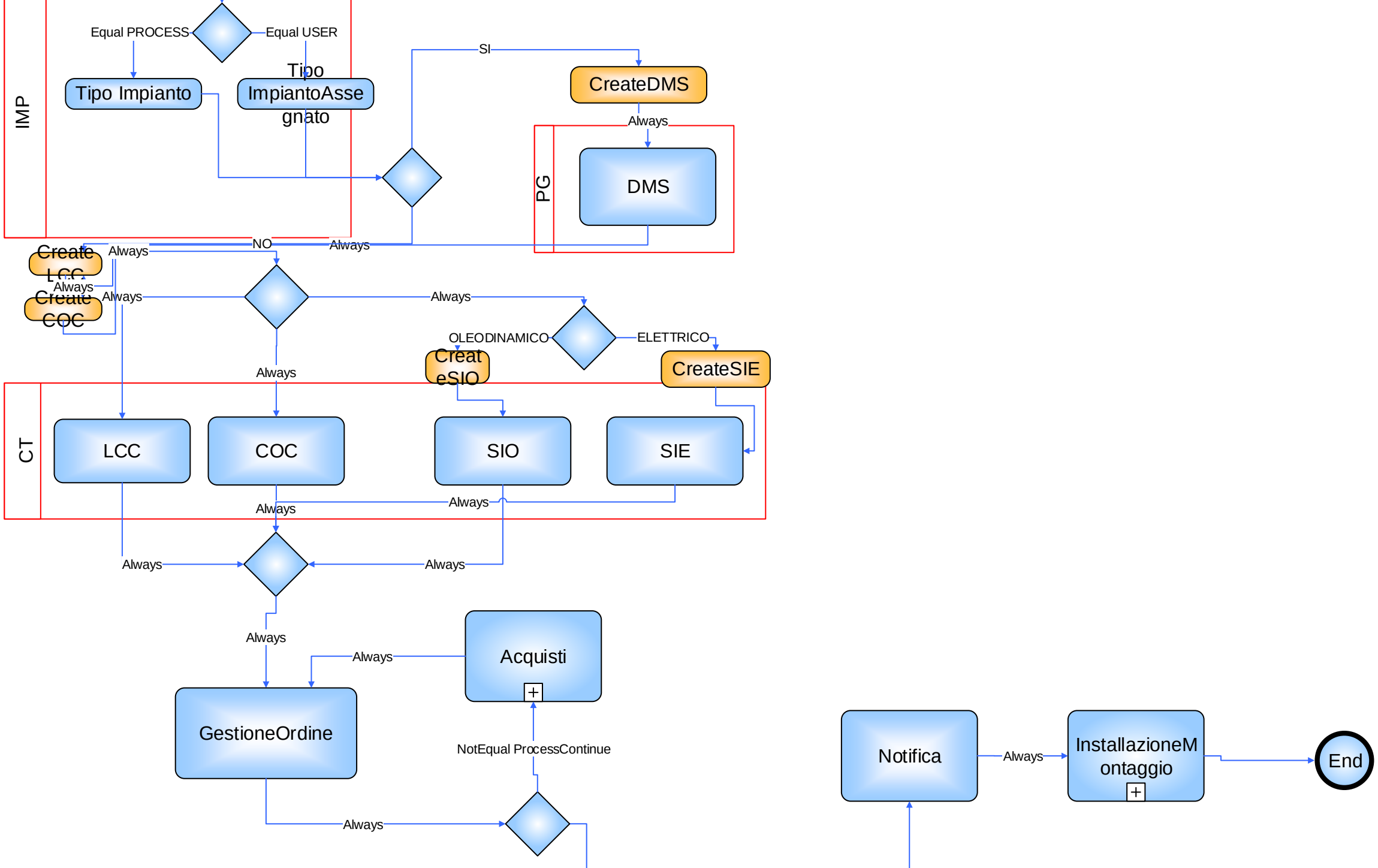
IMP
Equal PROCESS
Equal USER
Tipo Impianto
Tipo ImpiantoAssegnato
SI
CreateDMS
Always
PG
DMS
NO
Always
Always
Create LCC
Always
Always
Create COC
Always
OLEODINAMICO
ELETTRICO
Always
Creat eSIO
CreateSIE
CT
LCC
COC
SIO
SIE
Always
Always
Always
Always
Always
Acquisti
GestioneOrdine
NotEqual ProcessContinue
Always
Notifica
Always
InstallazioneMontaggio
End

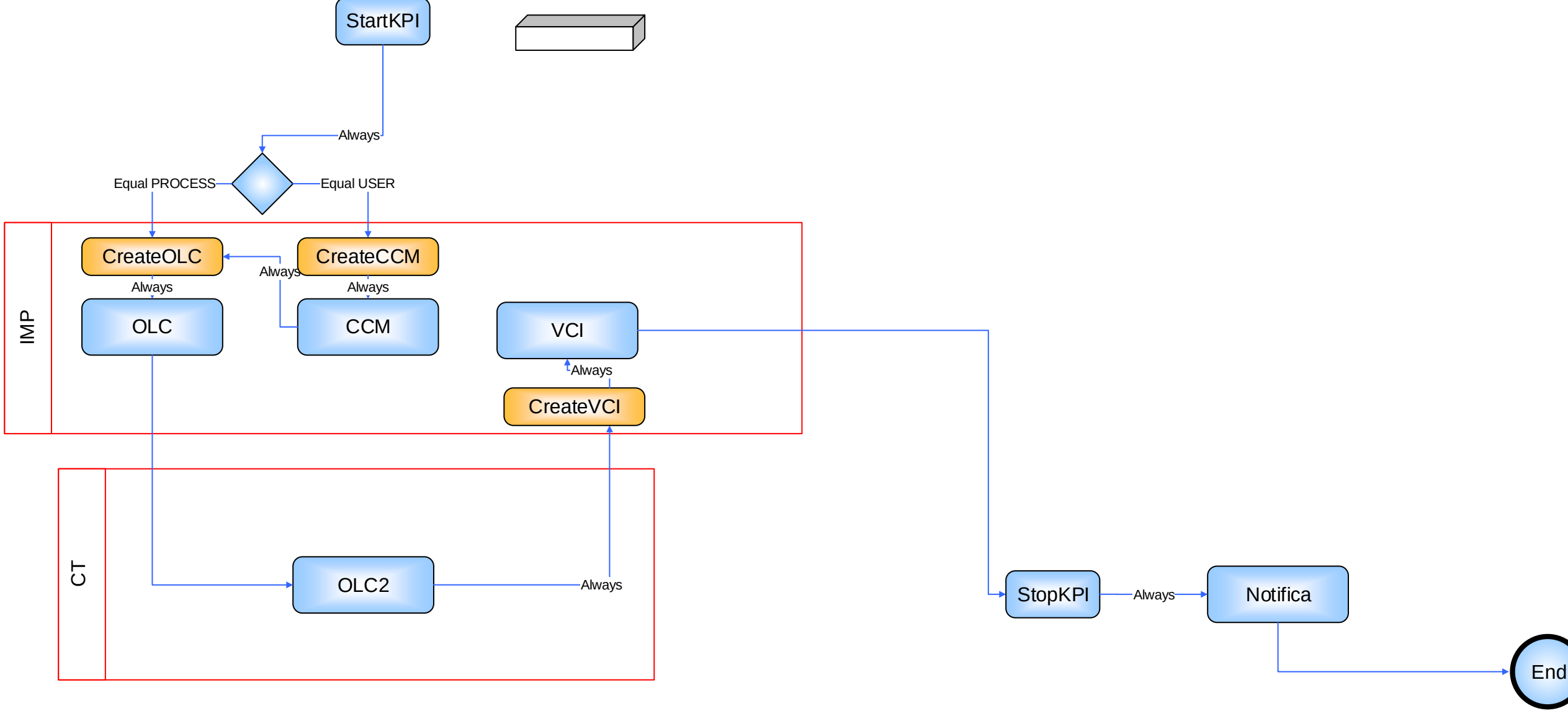
StartKPI
Always
Equal PROCESS
Equal USER
IMP
CreateOLC
CreateCCM
Always
Always
Always
OLC
CCM
VCI
Always
CreateVCI
CT
OLC2
Always
StopKPI
Always
Notifica
End

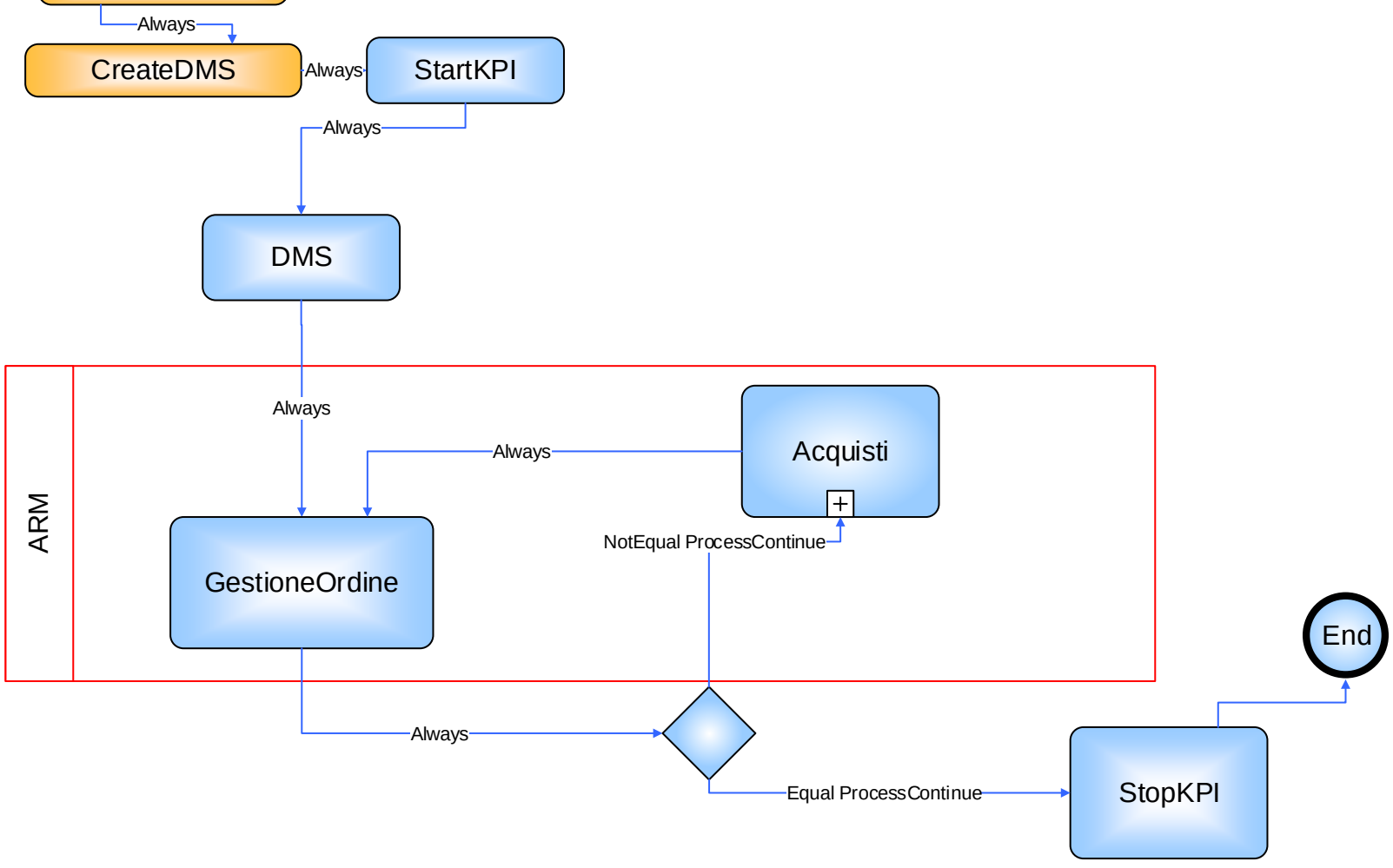
Always
CreateDMS
Always
StartKPI
Always
DMS
ARM
Always
Always
Acquisti
GestioneOrdine
NotEqual ProcessContinue
End
Always
Equal ProcessContinue
StopKPI

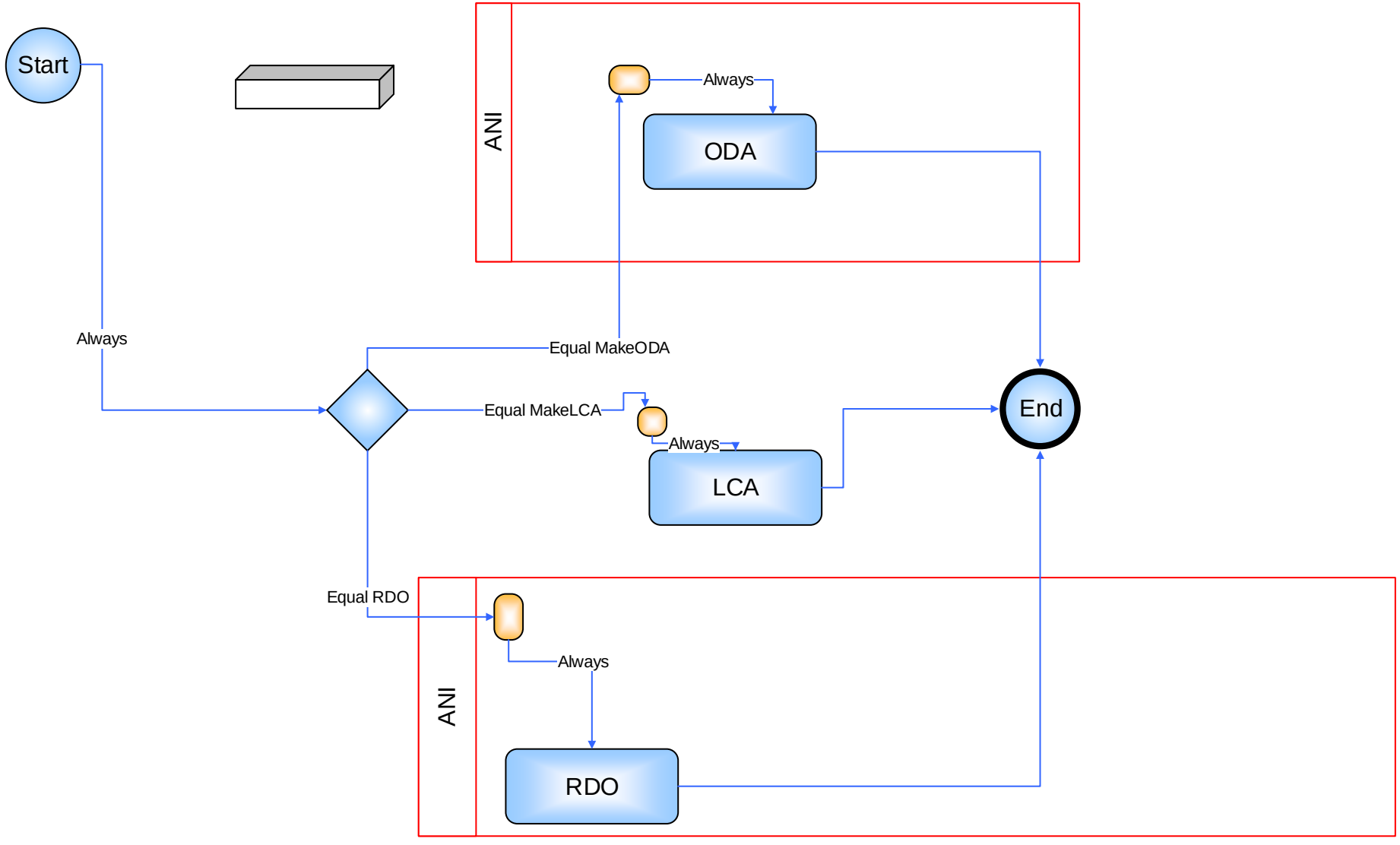
Start
ANI
Always
ODA
Always
Equal MakeODA
Equal MakeLCA
Always
LCA
End
Equal RDO
ANI
Always
RDO

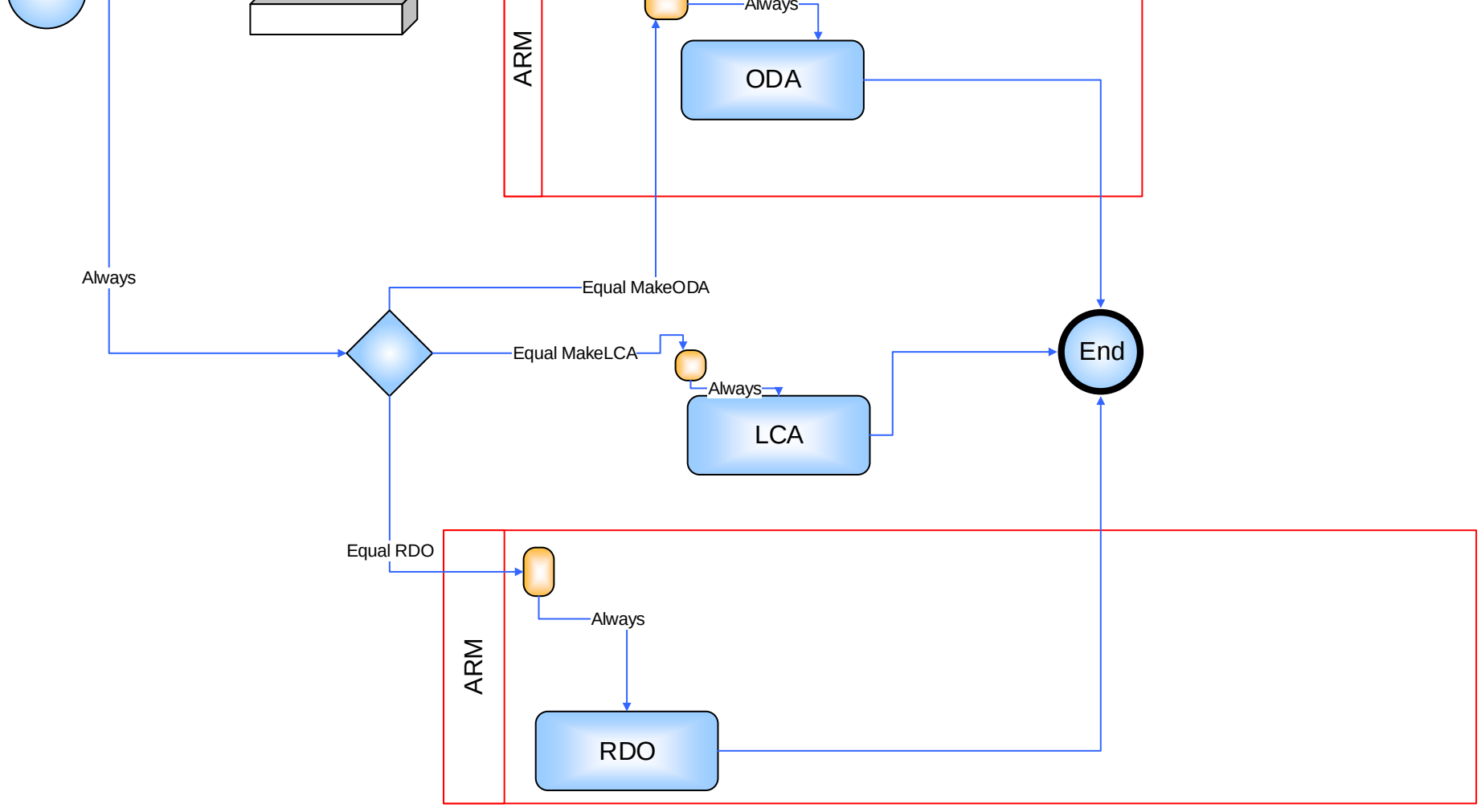
ARM
Always
ODA
Always
Equal MakeODA
Equal MakeLCA
Always
LCA
End
Equal RDO
ARM
Always
RDO