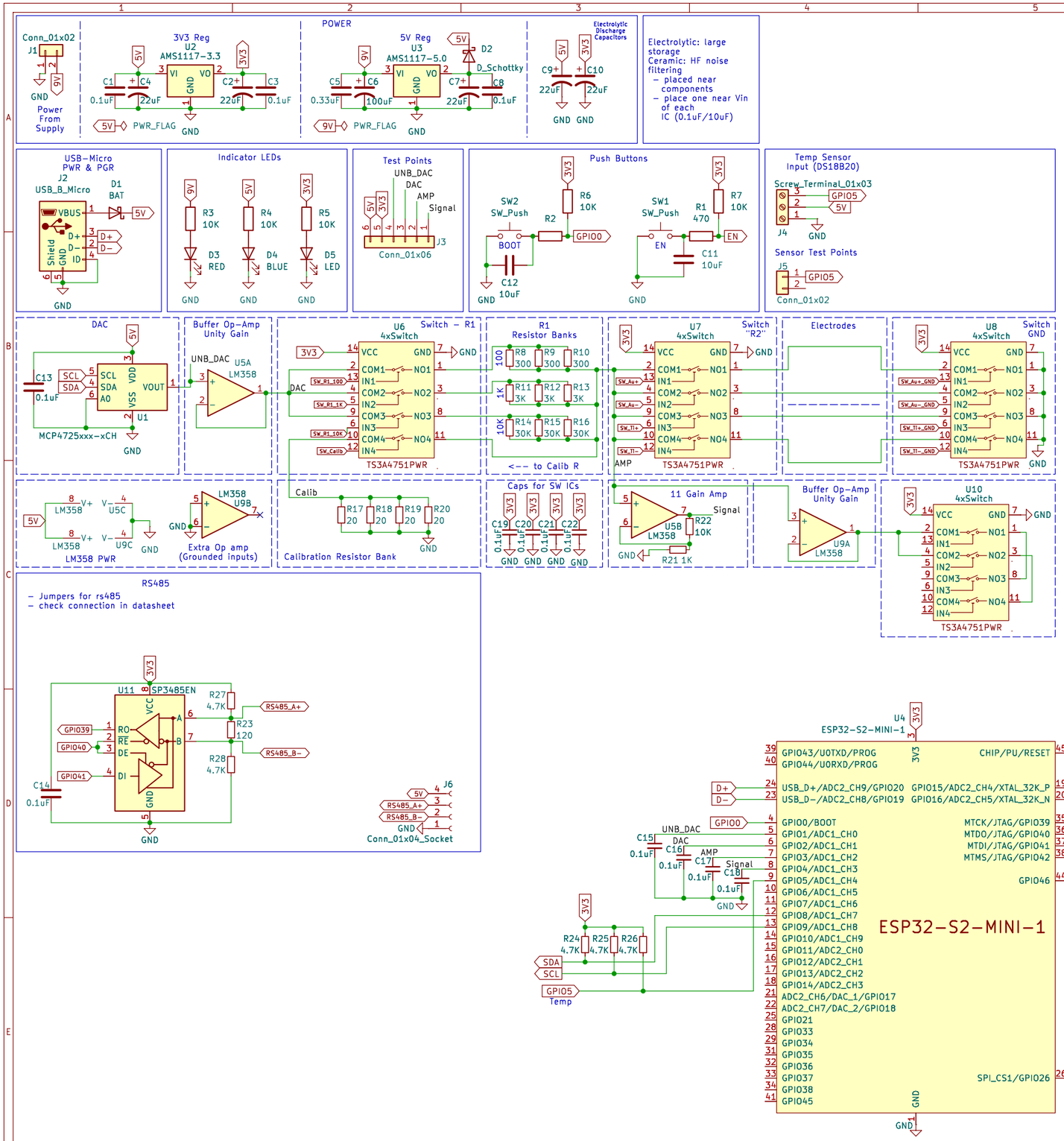

TODO:
- sensors (prsssure)
- ADCs (Done?)
- test points (done?)
- electrodes
- SW-guards
- Check LED Vdrop and I

PCB:
- make sure caps for ICs are near IC

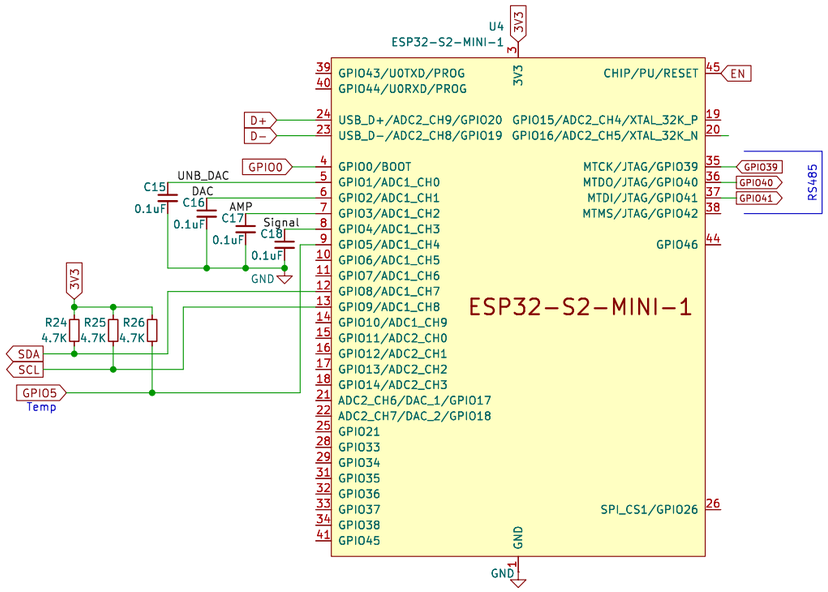

University of Cape Town	
Sheet: /	
File: probe.kicad_sch	
Title: Probe – EEE4022S	
Size: A3 Date: 2025-08-17	Rev: V1.0
KiCad E.D.A. 8.0.6	Id: 1/1