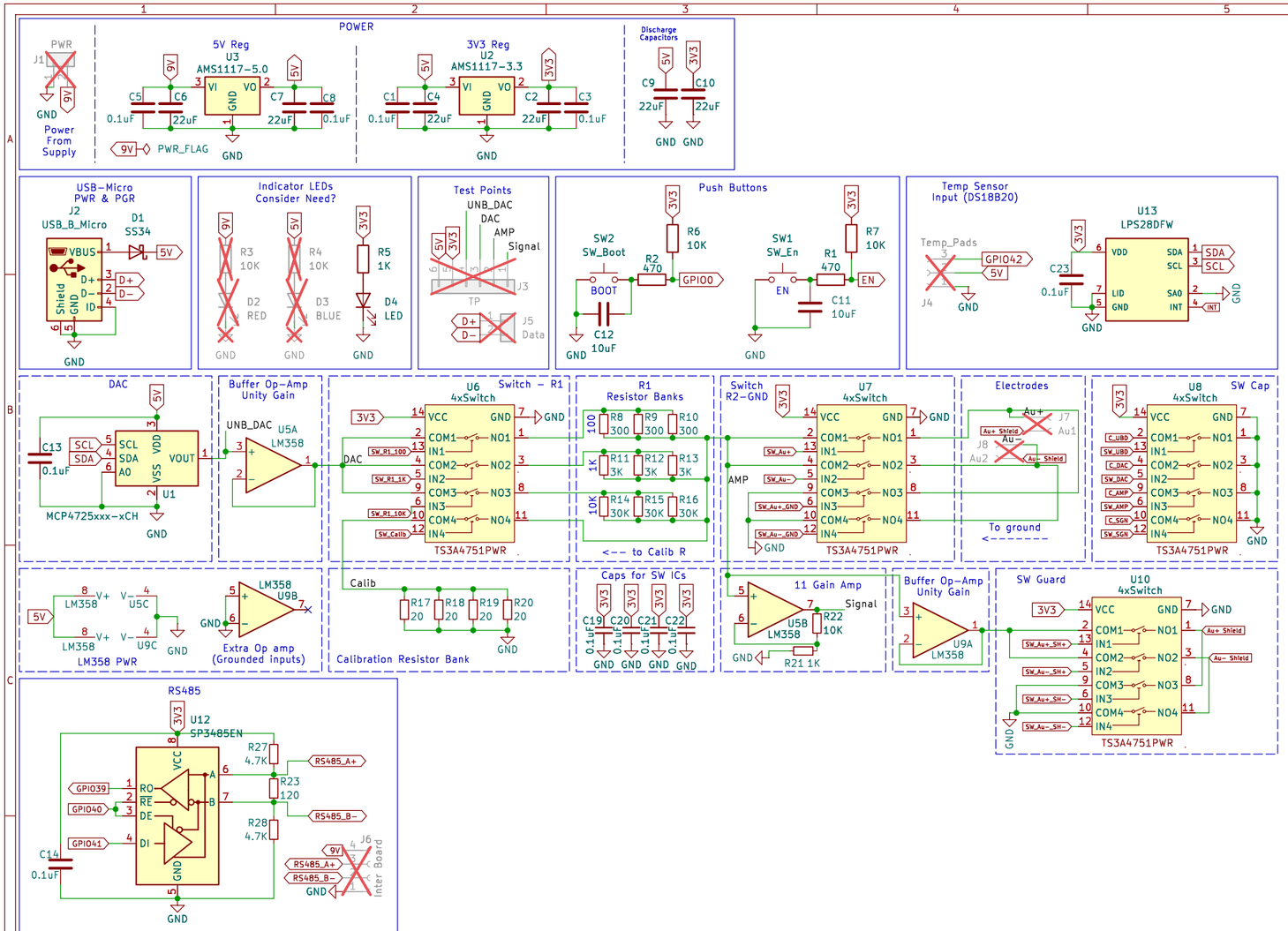

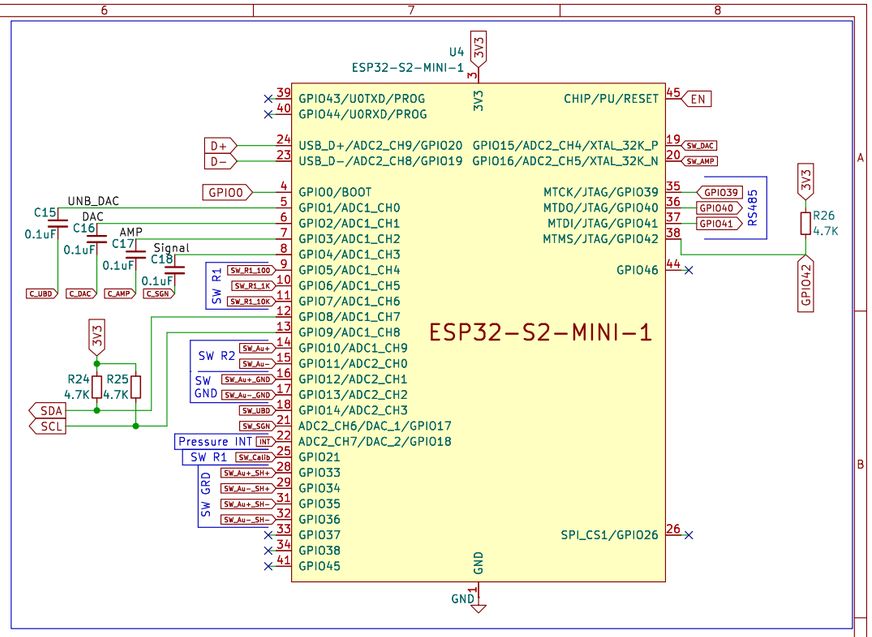

GPIOs:
Boot - 0
EN - Reset
ADC Usage 1,2,3,4
I2C SDA/SCL - 8,9
D+,D- - 20,19

Sensors:
Pressure INT - 18
Temp - 42 (1 Pin)

RS485:
RO - 39
RE,DE - 40
DI - 41

Switch Output:
SW R1 - 5,6,7,21
SW R2 - 10,11 GND - 12,13
SW Cap - 14,15,16,17
SW GRD Au - 33,34,35,36

Unused:
26,37,38,43,44,45,46

University of Cape Town		
Sheet: /		
File: probe.kicad_sch		
Title: Probe - EEE4022S		
Size: A3	Date: 2025-08-18	Rev: V1.0
KiCad E.D.A. 8.0.6		Id: 1/1