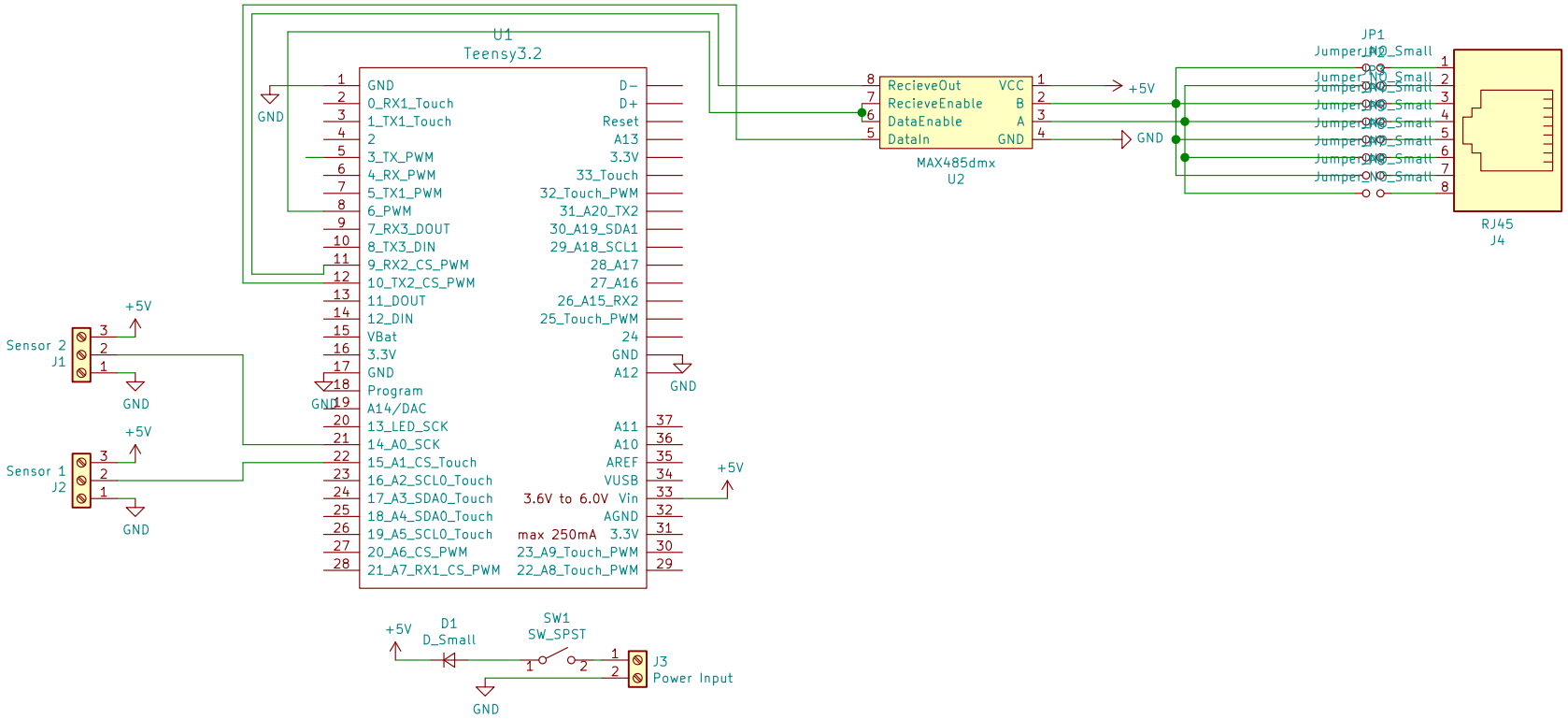

Design for JLCPCB 1-2 Layer Service

Sheet: /
File: rs485_single_teensy.sch

Title:

Size: USLetter	Date:	**Rev: 1**
KiCad E.D.A. kicad (5.1.4)-1		Id: 1/1