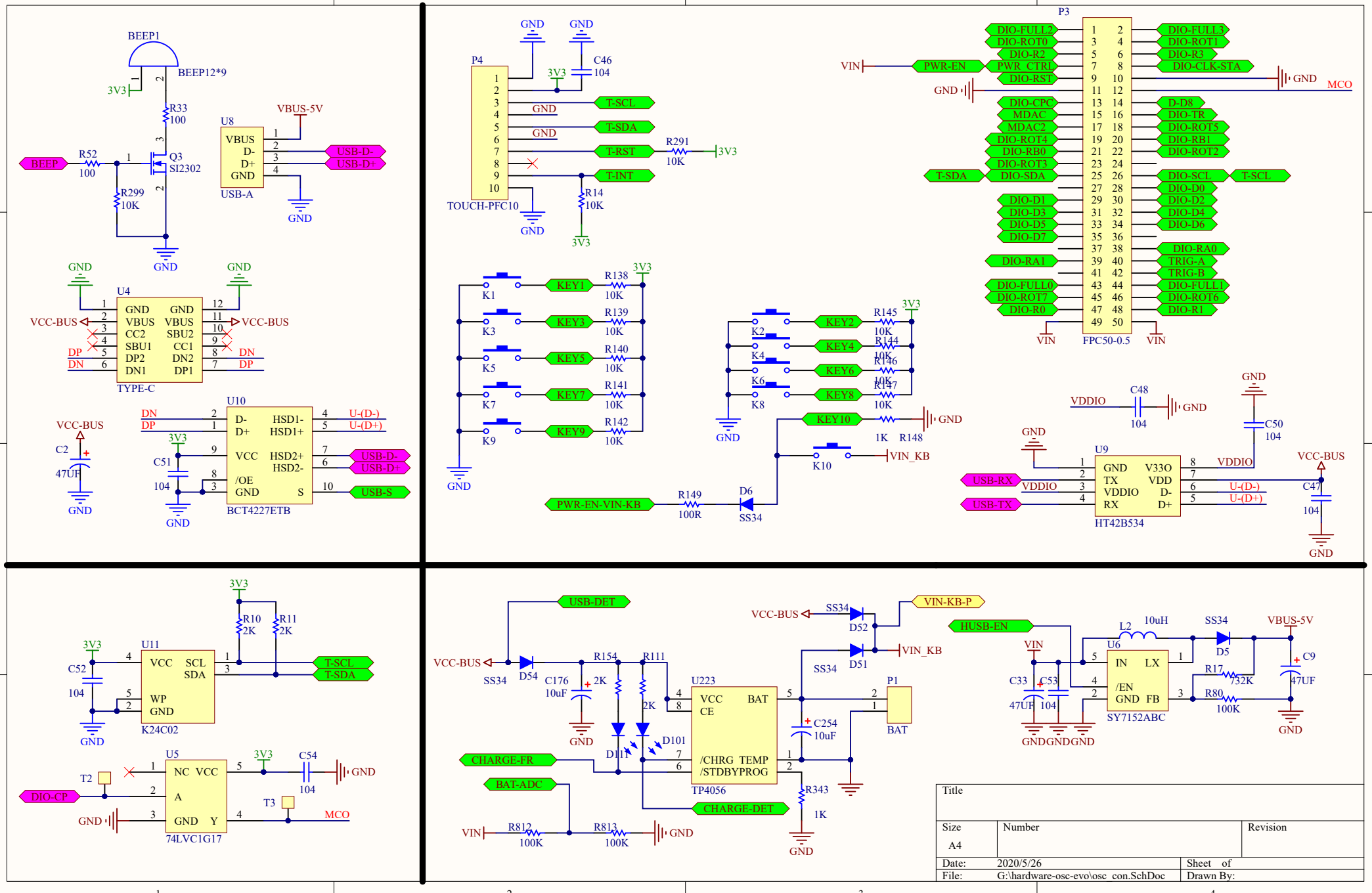
BEEP1
BEEP12*9
3V3
R33
100
BEEP
R52
100
Q3
SI2302
R299
10K
GND
U8
VBUS
D-
D+
GND
USB-A
VBUS-5V
USB-D-
USB-D+
U4
GND
VBUS
CC2
SBU1
DP2
DN1
CC1
SBU2
DN2
DP1
VCC-BUS
DP
DN
TYPE-C
U10
D-
D+
VCC
/OE
HSD1-
HSD1+
HSD2+
HSD2-
S
BCT4227ETB
U-(D-)
U-(D+)
USB-S
C2
47UF
C51
104
P4
TOUCH-PFC10
C46
T-SCL
T-SDA
T-RST
T-INT
R291
10K
R14
KEY1
KEY3
KEY5
KEY7
KEY9
R138
R139
R140
R141
R142
K1
K3
K5
K7
K9
KEY2
KEY4
KEY6
KEY8
KEY10
R145
R144
R146
R147
R148
1K
K2
K4
K6
K8
K10
VIN_KB
PWR-EN-VIN-KB
R149
100R
D6
SS34
P3
FPC50-0.5
VIN
PWR-EN
PWR_CTRL
DIO-FULL2
DIO-ROT0
DIO-R2
DIO-RST
DIO-CPC
MDAC
MDAC2
DIO-ROT4
DIO-RB0
DIO-ROT3
DIO-SDA
DIO-D1
DIO-D3
DIO-D5
DIO-D7
DIO-RA1
DIO-FULL0
DIO-ROT7
DIO-R0
DIO-FULL3
DIO-ROT1
DIO-R3
DIO-CLK-STA
MCO
D-D8
DIO-TR
DIO-ROT5
DIO-RB1
DIO-ROT2
DIO-SCL
DIO-D0
DIO-D2
DIO-D4
DIO-D6
DIO-RA0
TRIG-A
TRIG-B
DIO-FULL1
DIO-ROT6
DIO-R1
VDDIO
C48
104
C50
U9
GND
TX
VDDIO
RX
V33O
VDD
D-
D+
HT42B534
USB-RX
USB-TX
C47
U11
VCC
SCL
SDA
WP
K24C02
R10
2K
R11
C52
U5
NC
VCC
A
Y
74LVC1G17
DIO-CP
T2
T3
C54
USB-DET
VCC-BUS
SS34
D54
C176
10uF
R154
R111
2K
D101
D111
U223
VCC
CE
BAT
/CHRG
TEMP
/STDBYPROG
TP4056
CHARGE-FR
BAT-ADC
CHARGE-DET
R812
100K
R813
C254
10uF
R343
1K
D52
D51
VIN-KB-P
P1
BAT
HUSB-EN
L2
10uH
D5
R17
732K
R80
100K
C9
47UF
U6
IN
LX
/EN
GND
FB
SY7152ABC
C33
C53
Title
Size
A4
Number
Revision
Date:
2020/5/26
Sheet of
File:
G:\hardware-osc-evo\osc_con.SchDoc
Drawn By:

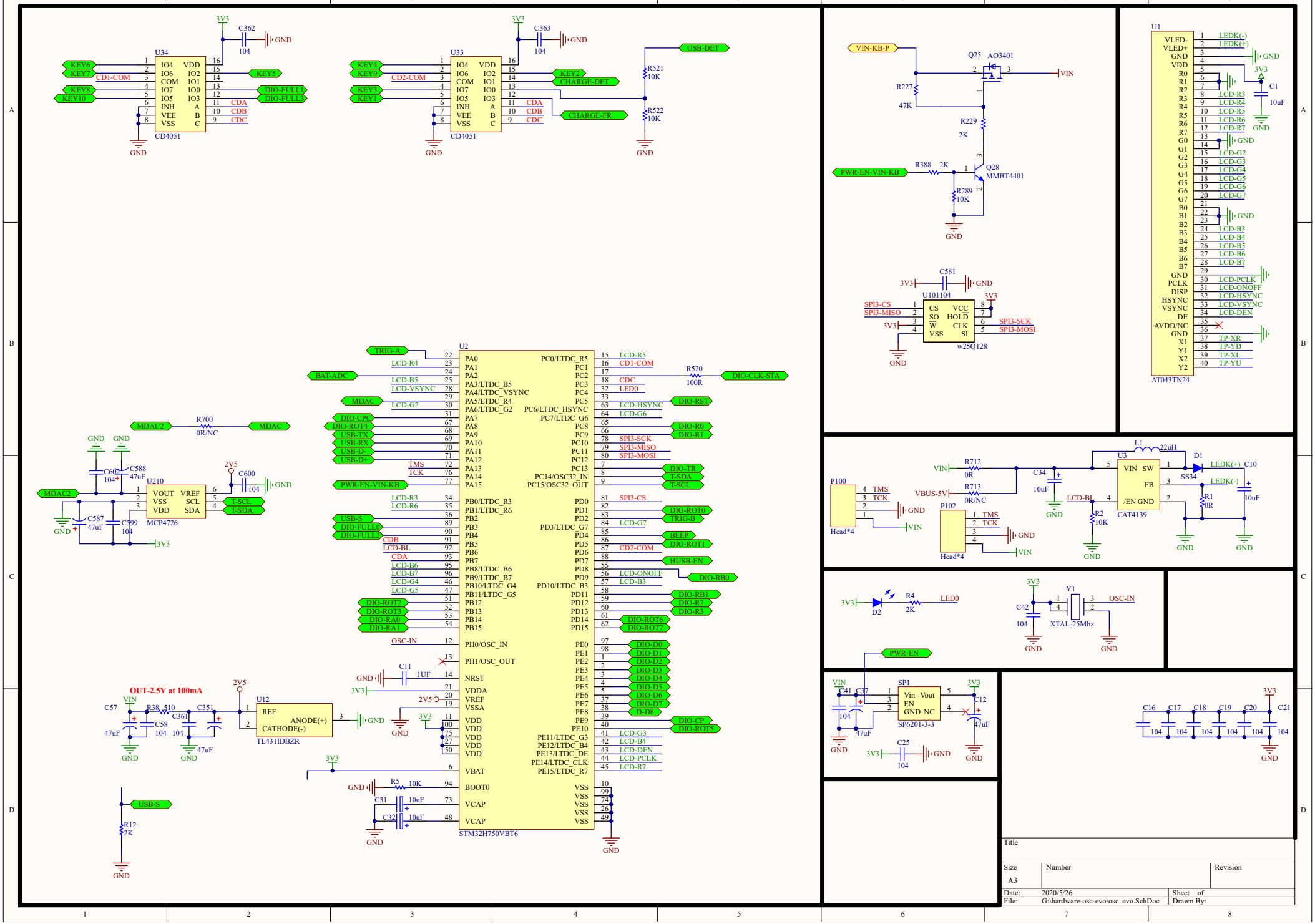
U34
CD4051
U33
CD4051
C362
C363
104
GND
3V3
KEY6
KEY7
CD1-COM
KEY8
KEY10
KEY5
DIO-FULL1
DIO-FULL3
CDA
CDB
CDC
KEY4
KEY9
CD2-COM
KEY3
KEY1
KEY2
CHARGE-DET
CHARGE-FR
USB-DET
R521
10K
R522
10K
VIN-KB-P
Q25
AO3401
VIN
R227
47K
R229
2K
PWR-EN-VIN-KB
R388
2K
Q28
MMBT4401
R289
10K
C581
U101104
w25Q128
SPI3-CS
SPI3-MISO
SPI3-SCK
SPI3-MOSI
U1
AT043TN24
LEDK(-)
LEDK(+)
C1
10uF
LCD-R3
LCD-R4
LCD-R5
LCD-R6
LCD-R7
LCD-G2
LCD-G3
LCD-G4
LCD-G5
LCD-G6
LCD-G7
LCD-B3
LCD-B4
LCD-B5
LCD-B6
LCD-B7
LCD-PCLK
LCD-ONOFF
LCD-HSYNC
LCD-VSYNC
LCD-DEN
TP-XR
TP-YD
TP-XL
TP-YU
U2
STM32H750VBT6
TRIG-A
BAT-ADC
MDAC
DIO-CP0
DIO-ROT4
USB-TX
USB-RX
USB-D-
USB-D+
PWR-EN-VIN-KB
USB-S
DIO-FULL0
DIO-FULL2
DIO-ROT2
DIO-ROT3
DIO-RA0
DIO-RA1
OSC-IN
R520
100R
DIO-CLK-STA
DIO-RST
DIO-R0
DIO-R1
DIO-TR
T-SDA
T-SCL
DIO-ROT0
TRIG-B
BEEP
DIO-ROT1
HUSB-EN
DIO-RB0
DIO-RB1
DIO-R2
DIO-R3
DIO-ROT6
DIO-ROT7
DIO-D0
DIO-D1
DIO-D2
DIO-D3
DIO-D4
DIO-D5
DIO-D6
DIO-D7
D-D8
DIO-CP
DIO-ROT5
LED0
MDAC2
R700
0R/NC
U210
MCP4726
C602
104+
C588
47uF
C587
47uF
C599
104
C600
2V5
OUT-2.5V at 100mA
U12
TL431IDBZR
REF
ANODE(+)
CATHODE(-)
C57
47uF
R38
510
C58
104
C361
104
C351
47uF
C11
1UF
R5
10K
C31
10uF
C32
10uF
R12
2K
P100
Head*4
TMS
TCK
VBUS-5V
R712
0R
R713
0R/NC
C34
10uF
L1
22uH
U3
CAT4139
VIN
SW
FB
/EN
GND
D1
SS34
LEDK(+)
LEDK(-)
C10
10uF
R1
0R
LCD-BL
R2
10K
P102
Head*4
D2
R4
2K
C42
104
Y1
XTAL-25Mhz
OSC-IN
PWR-EN
SP1
SP6201-3-3
Vin
Vout
EN
GND
NC
C41
C37
C12
47uF
C25
104
C16
C17
C18
C19
C20
C21
Title
Size
A3
Number
Revision
Date:
2020/5/26
Sheet of
File:
G:\hardware-osc-evo\osc_evo.SchDoc
Drawn By: