ADDENDUM
to
INSTALLATION INSTRUCTIONS
for

Grant Spira 6-26kW and 9-36kW Wood Pellet Boilers

DOC42-01/02 Rev03 - December 2014

ATTENTION INSTALLERS - UPDATED INFORMATION!

The Grant Spira condensing wood pellet boilers have several recent changes that differ from the Installation & Servicing Instructions supplied with the unit. These changes are due to both our continued product improvement process and compliance with new European Standards.
Please read this Addendum and use the information in conjunction with the corresponding sections of the Installation & Servicing Instructions (as indicated below).

After installation and commissioning the boiler(s), please ensure that both the Installation & Servicing Instructions and this Addendum are left with the user for future reference.

WASH SYSTEM MANIFOLD

Grant Spira boilers are no longer supplied with the wash system manifold pipe factory-fitted through the right hand side of the boiler, as stated in the Installation & Servicing Instructions. This item is now supplied loose in the accessories box for fitting on site in either one of two possible positions, depending on the location of the pellet hopper.

Refer to Section 4.9 of the Installation and Servicing Instructions for guidance on which side of the boiler the wash system manifold should be fitted.

The remainder of the wash system consists of the pressure gauge and solenoid valve assembly, flexible hose, isolating valve (with integral check valve). This is also supplied in the accessories box, but not connected to the wash system manifold pipe.

To fit the manifold and wash system:

- Press out the semi-pierced hole in either the left or right hand side casing panel, as required.
- Unscrew and remove the two manifold fixing screws from the side casing panel.
- Fit the end of the manifold pipe through the hole in the side casing panel and then push it fully through the corresponding holes in both sides of the secondary heat exchanger chamber.
- Rotate the tube so that the spray holes are facing downwards, i.e. with the two holes in the retaining plate aligned with the threaded inserts in the side casing panel.
- Fit the two screws previously removed, but do not tighten at this stage as the water spray direct may have to be adjusted during Commissioning.
- Fit the gauge/valve assembly to the end of the manifold pipe using the 22mm compression elbow.

NOTE

Before fitting the gauge/valve assembly to the manifold pipe, ensure that the pressure gauge is facing forwards, i.e. towards the front of the boiler. Rotate the gauge/ valve assembly as necessary to correctly position the pressure gauge.

PELLET FEED TUBE

Grant Spira boilers are no longer supplied with the pellet feed tube factory-fitted to the burner. The tube is now supplied loose in the accessories box for fitting on site in either one of two possible positions, depending on the location of the pellet hopper. The pellet tube gasket and three fixing screws are supplied fitted to the burner.

With hopper located on the left side of the boiler - the pellet feed tube must be fitted to point towards the left side. See Figure A.

With hopper located on the right side of the boiler - the pellet feed tube must be fitted to point towards the right side. See Figure B.

With hopper located between two boilers (in a 'double boiler' installation) - the right hand boiler must have the pellet feed tube pointing to the left (Figure A), and the left hand boiler must have the pellet feed tube pointing to the right (Figure B).

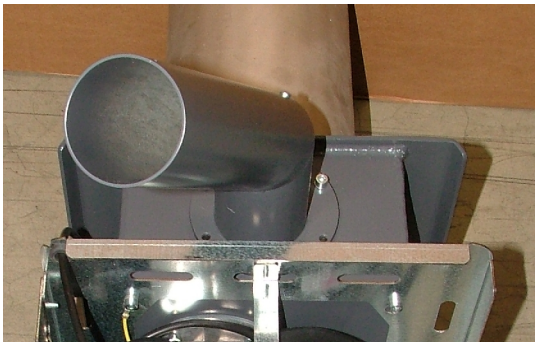

Figure A: Pellet feed tube – LH hopper

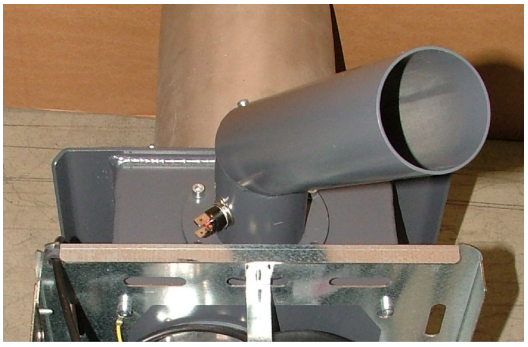

Figure B: Pellet feed tube – RH hopper

To fit the pellet feed tube to the burner:

First, remove the burner from the combustion chamber door

- Remove the red burner cover by loosening the four M5 screws (two on each side of the cover) and lifting it off the burner.
- Disconnect the plugs from the left side of the burner. Loosen the four screws (two on either side of the burner) and lift off the red burner cover.
- Whilst supporting the burner, unscrew and remove the two M8 burner securing nuts and washers, one each side of the burner.
- Carefully withdraw the burner from the combustion chamber door, taking care not to damage the burner door gasket, and place it on a suitable surface to work on it.

Then, fit the pellet feed tube

- Using a 4mm Allen key, remove the three pellet tube fixing screws and locking washers. Take care not to drop them into the rectangular pellet feed opening in the top of the burner.
- Check the circular gasket is correctly positioned around the pellet feed opening and that the three cutouts in the gasket are aligned with the threaded holes in the burner.
- Position the flange of the pellet feed tube on the gasket.
- Align the holes in the flange with those in the gasket and burner such that the open end of the pellet feed tube points either to the right or left, as required.
- Re-fit the three screws and washers. Tighten them down evenly to secure the pellet feed tube to the burner.
- Fit the pellet feed tube thermostat lead on to the thermostat terminals. Refer to 'Burner Cover' section of this addendum.

With the gasket correctly located, re-fit the burner to the combustion chamber door.

- Carefully insert the burner brazier through the opening and locate the holes in the burner flange onto the M8 studs (on either side of the burner).
- Secure the burner to the door with the two M8 nuts previously removed.
- Re-connect the plugs to their corresponding sockets on the left side of the burner. Ensure that each plug is fully pushed home until the small catch clicks into place. *Refer to Figure 11-10 in Installation and Servicing Instructions provided.*

DEFLECTOR BAFFLE

The Grant Spira 6-26 and 9-36 boilers are no longer fitted with a deflector baffle in the combustion chamber.

As a result ALL references to the baffle in the following sections of the Installation and Servicing Instructions should now be ignored:

10 Commissioning Section 10.3.2 Combustion Chamber (including Figure 10-3)

11 Boiler Servicing Section 11.6.3 Combustion Chamber (including Figure 11-9)

VIEWING WINDOW

All Grant Spira boilers are now fitted with a flame viewing window, located on the right hand side of the front combustion chamber door, just above the burner. Refer to Figure C.

Figure C: Location of viewing window

Figure D: New burner cover

BURNER COVER

All Grant Spira boilers are now fitted with an extended burner cover that reaches the front of the combustion chamber door. Refer to Figure D. This cover is held in position by four M5 screws (two on each side of the cover). To remove the cover these screws need to be loosened (not removed) and the cover is simply lifted off the burner.

The position of the pellet feed tube thermostat (burn-back thermostat) has been altered such that it is now **below** this extended burner cover.

With this new cover, the procedure to access the pellet feed tube thermostat (to reset or check operation) has changed. As a result, the following replaces the corresponding section in the Installation and Servicing Instructions supplied with the boiler:

10. Commissioning (including Figure 10.7)

10.5.1 Pellet Feed Tube ('Burn-back') Thermostat

WARNING

This procedure involves disconnecting a live mains connection. Do NOT insert any item into the opening in the moulded cap, on the end of the thermostat lead.

When the burner display reads 'WAIT BOILER THERMOSTAT' check the operation of the pellet feed tube ('burn-back') thermostat as follows:

- Remove the red burner cover by loosening the four M5 screws (two on each side of the cover) and lifting it off the burner.
- The thermostat is located on the pellet feed tube. Refer to Figure E.
- Disconnect the lead from thermostat terminals. Refer to Figure F.

The burner display screen should automatically go blank, as all power to the burner has been interrupted.

To make the burner operational again:

- Re-connect the lead.
- Refit the burner cover and tighten the four fixing screws.

Pellet feed tube ('burn-back') thermostat

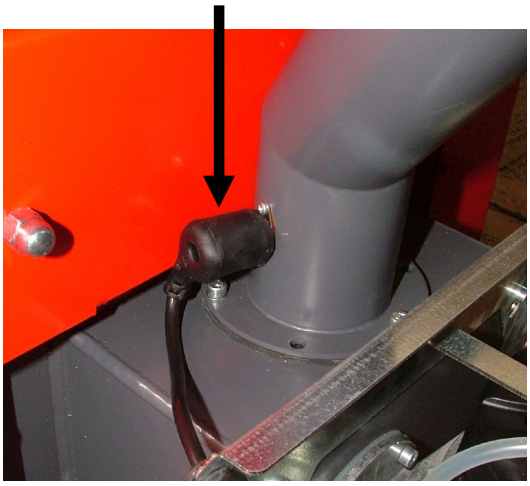

Figure E: Location of thermostat

Figure F: Removal of thermostat lead

NOTE: The operating temperature of the Pellet Feed Tube ('Burn back') thermostat has been changed from 60°C (refer to Section 2.1) to 90°C.

11.7.1 Removal of Burner

To clean the burner thoroughly it will be necessary to remove it from the boiler, as follows:

- Disconnect the three plugs from the left side of the burner. *Refer to Figure 11-10 in Installation and Servicing Instructions provided.*
- Remove the red burner cover by loosening the four M5 screws (two each side of the cover) and lifting it off the burner.
- Whilst supporting the burner, unscrew and remove the two M8 burner securing nuts, one on each side of the burner.
- Carefully withdraw the burner from the combustion chamber door taking care not to damage the burner door gasket.
- Place the burner on a suitable bench (e.g. portable 'workmate' type bench or similar) to work on.

11.9 Re-fitting Burner

Before re-fitting the burner, check the condition of the burner door gasket. Replace if necessary.

With the gasket correctly located, re-fit the burner to the combustion chamber door.

- Carefully insert the burner brazier through the opening and locate the holes in the burner flange onto the M8 studs (on either side of the burner).
- Secure the burner to the door with the two M8 nuts previously removed.
- Re-connect the three plugs to their corresponding sockets on the left side of the burner. Ensure that each plug is fully pushed home until the small catch clicks into place. *Refer to Figure 11-10 in Installation and Servicing Instructions provided.*
- Check the condition of the pellet delivery hose and ensure it forms an air tight seal each end.
- Check for any damage to the hose and replace if necessary.

A damaged pellet delivery hose can allow a back draught through the boiler, resulting in the pellet feed tube (burn back) thermostat operating and shutting down the burner.

After completing the Safety Device checks *(see Section 11.12 in Installation and Servicing Instructions provided)* re-fit the burner cover and tighten the four screws to secure in place.

REMOVABLE DOOR CATCH HANDLE

All Grant Spira boilers are now supplied with a removable handle for the combustion chamber door catch. This must be removed when the door is shut.

- **To open the combustion chamber door**
  Fit the removable door handle into the slot in the door catch. Refer to Figure G.
  Lift handle to disengage the catch and open the door. Refer to Figure H.

- **When closing the combustion chamber door**
  Fully engage the door catch to remake the door cut-out switch.
  Remove the handle and keep in a safe place for future use.

Figure G: Fitting removable door handle

Figure H: Opening door catch

CONDENSATE DISPOSAL

There has been a change to the information given in the following section of the Installation and Servicing Instructions:

5 Condensate Disposal

The following sections refer to the use of a purpose made soakaway

Section 5.1 General Requirements
Section 5.5 Condensate Soakaway

MCS Product Certification Scheme Requirements for Biomass (MCS 008) now states that:

"Because of the volume of wash-down/condensate discharge it is NOT recommended to discharge into a purpose-made soakaway"

ELECTRICAL WIRING
There has been a small change to the internal wiring of the Spira pellet hopper. This affects the information given in the following section of the Installation and Servicing Instructions:

8 Electrical
As detailed in this section of the Installation and Servicing Instructions, the Grant Spira Condensing Wood Pellet boiler requires a 230 V ~50 Hz electrical supply.

The boiler requires both a permanent mains supply and a switched live supply to control the boiler.

For details of the heating system controls connections refer to Section 8.4 and Figures 8-9 or 8-10 in the Installation and Servicing Instructions provided.

Connect the mains supply using the procedure given in Section 8.5 of the Installation and Servicing Instructions.

IMPORTANT
The power supply cable and flex should be at least 1.5mm² PVC, as specified in BS 6500 - Table 16.

The fused spur of the power supply to the boiler and controls must be fitted with a 13A fuse when a Grant SpiraVAC vacuum system is fitted; otherwise a 5A fuse is required.

All Grant Spira boiler pellet hoppers are now fitted with two in-line 5A fuses. These are located inside the electrical wiring enclosure in the back of the pellet hoppers. Refer to Figure J below.

Refer to Figures K and L for the revised electrical wiring diagrams for the single boiler and double boiler hoppers.

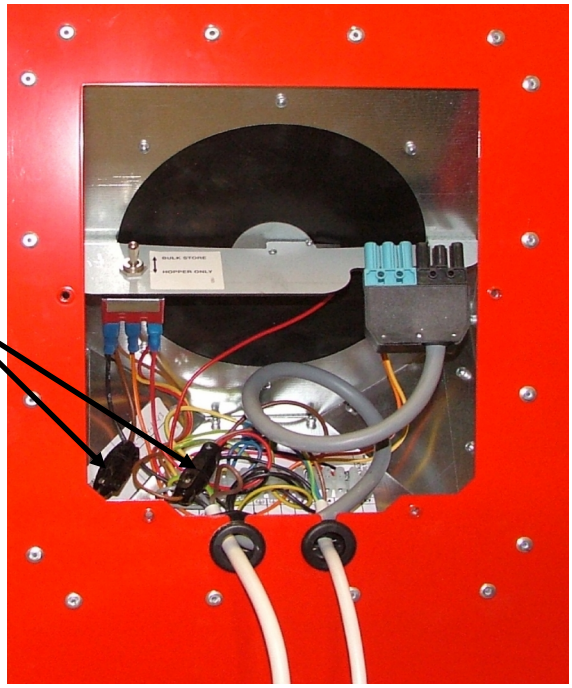

Figure J: Hopper wiring enclosure (with cover removed)

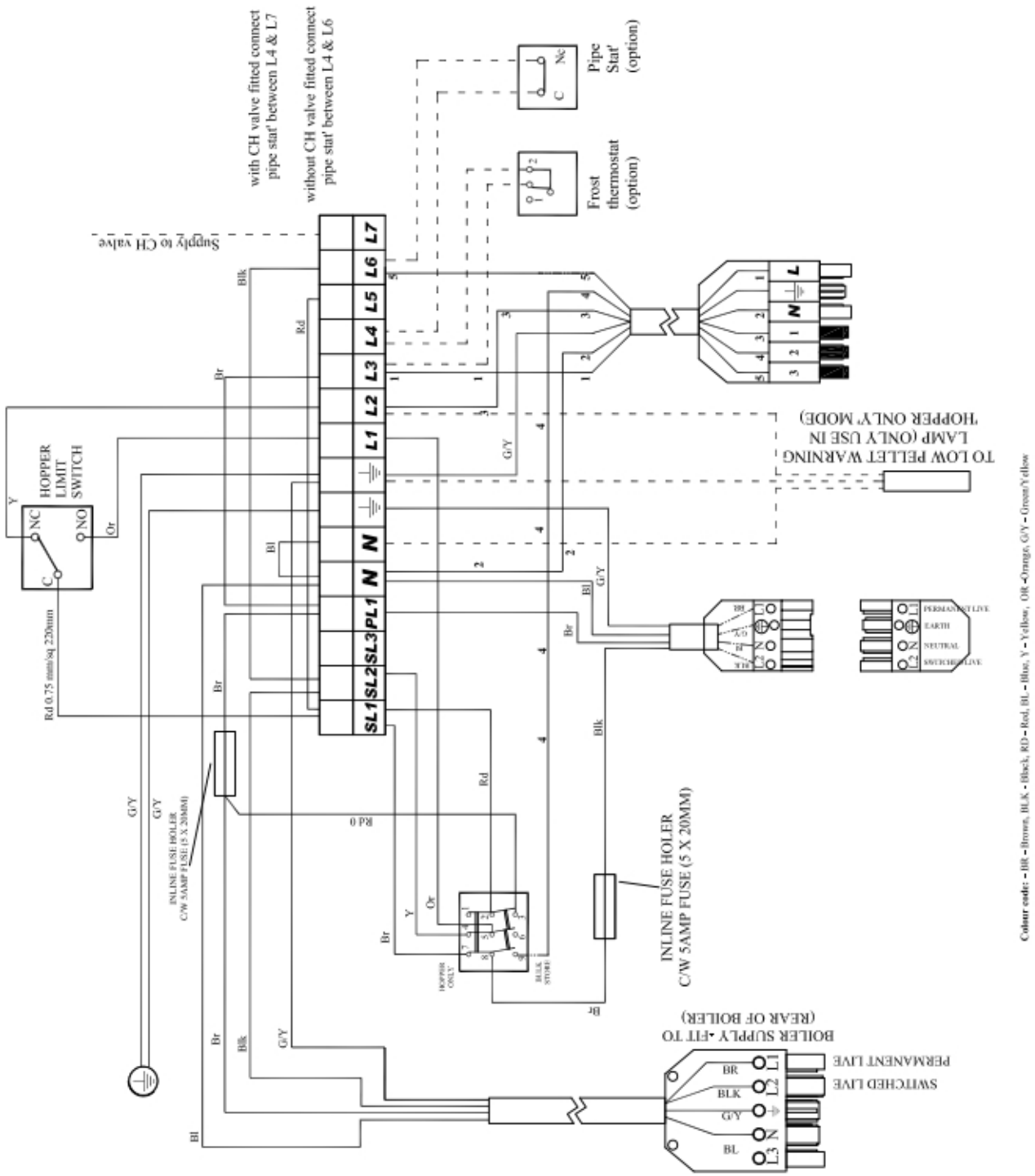

Figure K: Wiring diagram for single boiler hopper

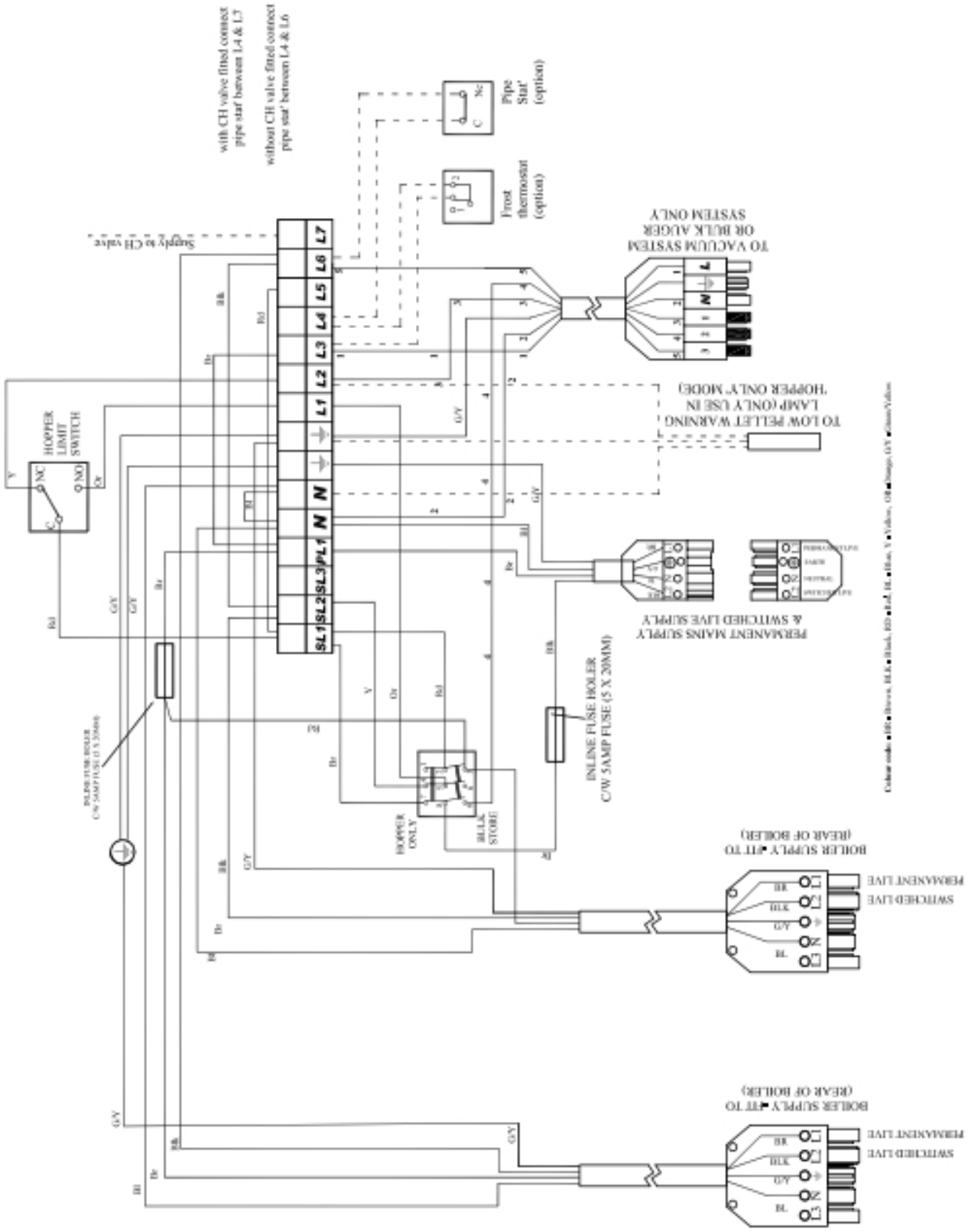

Figure L: Wiring diagram for double boiler hopper

GRANT ENGINEERING (UK) LTD
Hopton House, Hopton Industrial Estate, Devizes, Wiltshire. SN10 2EU
Telephone: 01380 736920 Fax: 01380 736991
Email: info@grantuk.com Website: www.grantuk.com