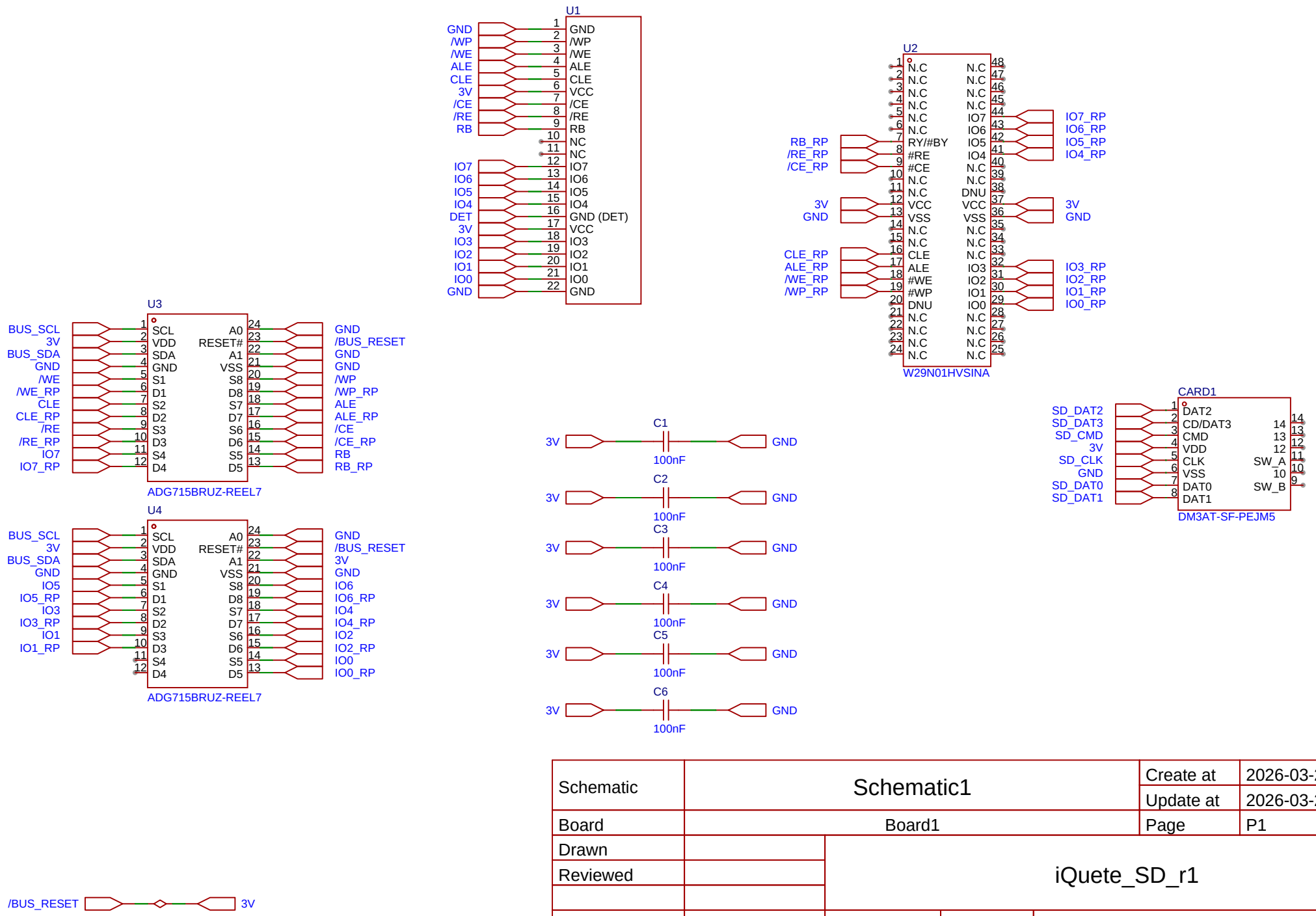

Schematic	Schematic1	Create at	2026-03-22
		Update at	2026-03-22
Board	Board1	Page	P1
Drawn		iQuete_SD_r1	
Reviewed			
		Version	Size	Page 1 Total 2
EasyEDA		V1.0	A4	EasyEDA.com

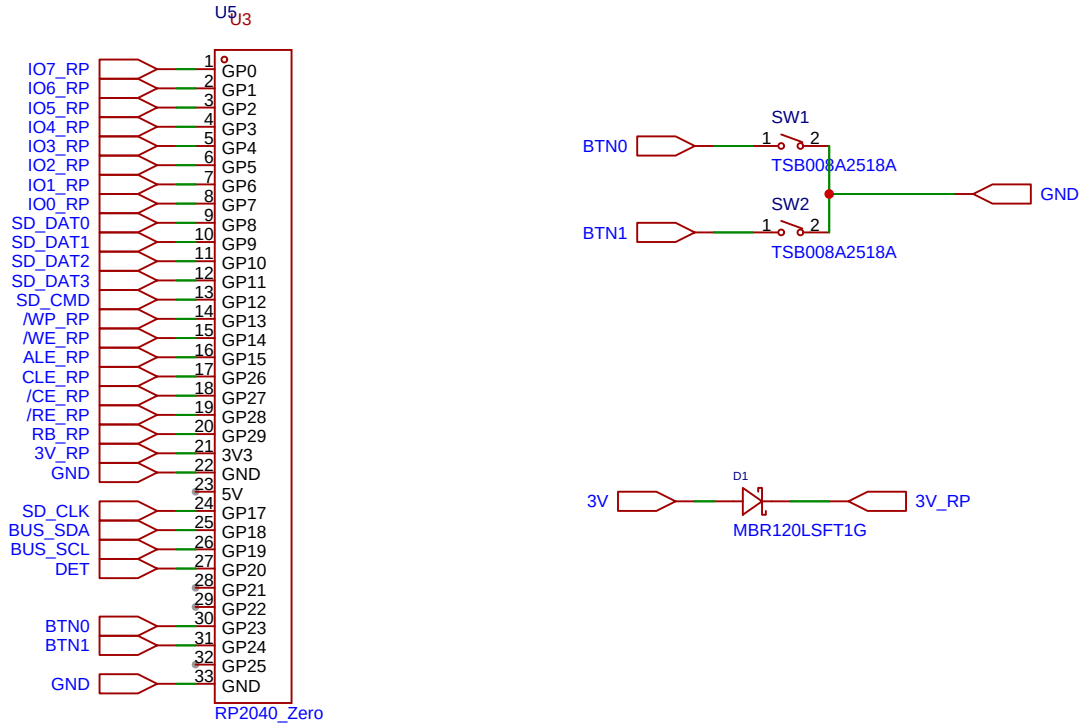

Schematic	Schematic1	Create at	2026-03-22
		Update at	2026-03-22
Board	Board1	Page	P2
Drawn		iQuete_SD_r1	
Reviewed			
		Version	Size	Page 2 Total 2
EasyEDA		V1.0	A4	EasyEDA.com