The Implementation of IoT based Smart Refrigerator System

Haidawati Nasir, Wan Basyar Wan Aziz, Fuead Ali
UniKL Malaysian Institute of Information Technology
1016 Jalan Sultan Ismail
50250 Kuala Lumpur
{haidawati,fuead}@unikl.edu.my

Kushsairy Kadir
UniKL, British Malaysia Institute,
Batu 8 Jalan Gombak,
53100 Gombak, Selangor,
kushsairy@unikl.edu.my

Sheroz Khan
International Islamic University,
Batu 8 Jalan Gombak,
53100 Gombak, Selangor,
sheroz@iium.edu.my

Abstract— **Wasted food due to spoilage is a critical resource issue. Food waste or food loss is food that is discarded or lost uneaten. Currently, in the world, according to the Food and Agriculture Organization of the United Nations (FAO), consumers waste about 1.3 billion tons of food annually and consumers in rich countries waste about 222 million tons of food products**

Once food products are purchased and set aside in a refrigerator, the users do not alert about their food items' expiration date and/or freshness unless they individually examine and track them. Moreover, for food products which are not labeled with an explicit expiration date may lead to significant food spoilage and additional expenditure for the users. However, with the latest trend technology of the Internet of Things (IoT), this problem can be resolved.

Combining the idea of Internet of Things and smart kitchen evolution, the smart refrigerator system is developed. The system consists of three main parts which are sensing module, control module and transmission module. Sensing module consists of load cell and odour sensor while control module consists of Arduino UNO and power supply unit and last but not least, the transmission module consists of LCD module and Wi-Fi module. These modules work together to determine contents status inside the refrigerator and notify the user about the condition and quantity of the food via an SMS or an email.

Keywords— ***Internet of Things (IoT), Smart Kitchen, Home Automation System, Arduino, Sensors***

I. Introduction

The Internet of Things refers to the use of intelligent connected devices and systems to leverage data gathered by embedding sensors and actuators in machines and other physical objects. The IoT creates an intelligent, invisible network fabric that can be sensed, controlled and programmed. IoT-enabled products employ embedded technology that allows them to communicate, directly or indirectly, with each other or the Internet [1].

Recently, smart kitchen always comes to mind whenever we talk about the Internet of Things or also known as Cloud of Things. The reason is the kitchen is the largest producer of waste and second largest user of energy in the home. Therefore, manufacturers always try to figure out a way or make an improvement to make smart products in the kitchen that reduce waste and energy use and increase convenience. Taking a Samsung Smart Home for example, by using "Enrich Your Life" as a slogan, Samsung Smart Home offers a "total home solution" with the goal of restoring balances to your life. It provides a way to take care of household duties remotely while also enriching the activities at home. As a result, consumer has lesser things to worry about and more time to enjoy quality time [2].

A refrigerator (colloquially fridge) is a popular household appliance that consists of a thermally insulated compartment and a heat pump (mechanical, electronic or chemical) that transfers heat from the inside of the fridge to its external environment so that the inside of the fridge is cooled to a temperature below the ambient temperature of the room. Refrigeration is an essential food storage technique in developed countries. The lower temperature lowers the reproduction rate of bacteria, so the refrigerator reduces the rate of spoilage.

However, despite of how expensive and branded refrigerator is, it could not keep the food stay fresh for too long and this could lead to food spoilage. Unfortunately, the users also have less time to check the condition of their food stored in the refrigerator every single day. They might also forget what types of food and for how long they have stored the food in the refrigerator. So, whenever they want to use the food for cooking, they might found that the food is already spoiled and end up throwing them away. It is such a waste.

Therefore, smart refrigerator system is developed which can alert the user about their food condition in the refrigerator. The system will send the message to the users to let them know how long they have stored certain food in the refrigerator. When the limit (the period which is set by the user) is reached, the system will send a warning message so that the user will use the food as soon as possible before it spoiled and to avoid from food waste and spoilage.

The rest of the paper is organized as follows. A brief review of the background is presented in the next section. In Section 3, we describe the implementation of the proposed method. Experimental results are given in Section 4. We conclude and address future work in Section 5.

II. RELATED WORKS

There is a great deal of the smart refrigerator research in the literature. One of the researches is work in [3]. In [3], the contents inside the refrigerator are monitored in real time and user is notified in case any product which is low on quantity The research uses Light Dependent Resistors (LDR) and pressure sensors. The pressure sensor triggers a notification to user as soon as the applied pressure is below 0.5 kg. LDR sensors monitor the containers in which liquids are sensed. This system uses SMS (Short Message Service) and email to remotely notify the user about scarce products. It also facilitates the purchase of scarce items by providing a link of the online vendor of that particular item.

Work in [4] classified smart refrigerator system by implemented it to sense the quantity as well as quality of the food items kept inside it. It also keeps on checking the expiry food products and the spoilage of eatable items. The system uses load cell sensor, STM32F103x8 Microcontroller, ESP8226 Wi-Fi module and Android application. The whole system is governed by the STM32F103x8 cortex M3 ARM microcontroller where load cell act as an input of microcontroller and Wi-Fi transmits all the information to the Android phone by using IoT [4].

Moreover, the research in [5] uses speech and camera (image recognition), barcode scanner and external database. The barcode scanner is used to scan and detect the product and then the details about the product are searched on an external database which is available on Internet. On the other hand, for foods that are not marked with barcodes, the camera will be used to identify the product. In case of notification, Google Agenda is used in [5] to notify user important food deadline messages, anytime and anywhere on a multichannel manner.

On the other hand, a research in [6] is quite different compared to other researches. It uses FridgeCam and Colour Code Project instead of sensors and scanners embedded board. The FridgeCam is used to examine how improving a consumer's food supply knowledge can reduce food stockpiling while the Colour Code Project is used to examine how improving consumer's awareness of food location can encourage consumption of forgotten foods. This research is purposely made to increase the technology's benefit and value to users and to promote reduced domestic food wastage.

The proposed system uses Wi-Fi module and Arduino UNO board. The collected data will then be sent to the cloud storage. The system uses odour sensor or also known as analog gas sensor. This sensor can sense a mixture of gasses produced by the vegetables or fruits stored in the refrigerator that slowly becomes rotten. It is very important in maintaining the freshness of the contents inside the fridge. The purpose of the system is to control the quantity of the food inside the refrigerator. It will alert the user whenever their storage inside the fridge is low in quantity. User will be alerted by receiving a notification through an application. Besides that, they can also monitor the condition of the food through an IoT platform. However, this Smart Refrigerator System also has another big purpose which is to maintain the quality of the food kept inside the refrigerator by using odour sensor as mentioned before which can also reduce food spoilage.

As a conclusion, most previous related works use sensors as a function to detect the quantity of the food stored inside the refrigerator. All of the previous work had the same function which to let the user know once their food stored in the kitchen is low in quantity.

III. IMPLEMENTATION

This section provides the hardware and software used in the implementation of the smart refrigeration system.

The system consists of a few sub-modules which are sensing module, control module and transmission module. Sensing module consists of gas, humidity and temperature sensor while control module consists of microcontroller and power supply unit and last but not least, transmission module consists of LCD module and Wi-Fi module. These modules work together to determine contents status inside the refrigerator and notify the user about the products via an SMS or an email. Figure 1 shows the block diagram of the smart refrigerator.

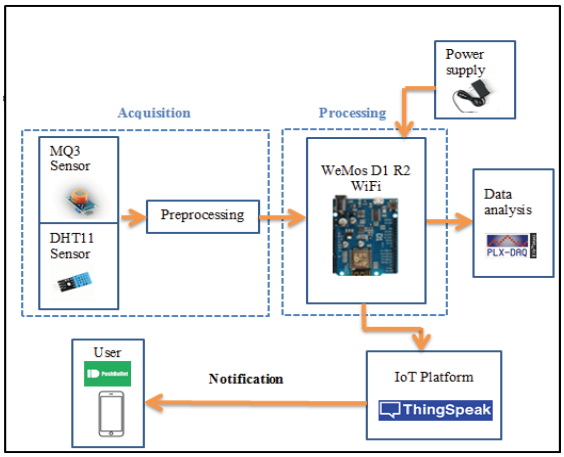

Fig. 1: Block Diagram of Smart Refrigerator System

MQ3 gas sensor is used to detect gasses produces by fruits or vegetables or any other organic contents stored in the refrigerator. There is a possibility that variety of foods are kept in the refrigerator at different time. Therefore, the latest food kept in the refrigerator is the latest to become rotten or expired. However, due to the mixture of gasses produced by the earliest food kept in the refrigerator, it also may affect the latest to become rotten faster than it supposed to be. In order to prevent this problem and maintain the quality and freshness of the contents inside the refrigerator, the gas sensor is used.

In addition to MQ3 sensor, DHT11 temperature and humidity sensor is used to monitor the temperature and humidity of the refrigerator. The reason is, temperature plays an important role to maintain the freshness of the food. Normal range temperature for refrigerator should be at or below 40° F (4° C). Therefore, with humidity measurement and temperature measurement range between 20 percent until 95 percent and between 0° C to 60° C respectively.

WeMos D1 R2 WiFi board is used as the controller for the smart system. It acts as a microcontroller that process and connects all the sensors The most important thing is, it connects all of them through WiFi connection so that user can monitor all the values using IoT platform and receive notification via it.

The notification application Pushbullet [7] is used and it is compatible with both Android and iOS mobile phones. Pushbullet is needed in order to send notification and alert the user about the condition of their food especially when it becomes rotten.

The system uses the ThingSpeak IoT platforms [8]. ThingSpeak is a free platform to enable a user to create a channel. The channel created can be set up either as a public view or private view. Anyone who has signed up to this account and have the channel's link can view the channel created if it is set up as 'public view' while on the other hand, only the user or who created the channel can view his or her own channel. The channel is used to store and view the collected data from sensors.

Figure 2 shows the flow chart of the system. Based on the flow chart, the notification is sent to the user once the value of the gas sensor exceeds the normal range. The normal range is the threshold value that can be set by the user. Once it exceeds the normal range, Pushbullet application is triggered by the system to execute the next steps. In this case, it will notify the user through SMS to turn off the system.

Data from the sensors are recorded using PLX-DAQ [9]. PLX-DAQ spreadsheet is compatible with Arduino. It can feed data directly from Excel. The spreadsheet can be downloaded freely at official website of Parallax.

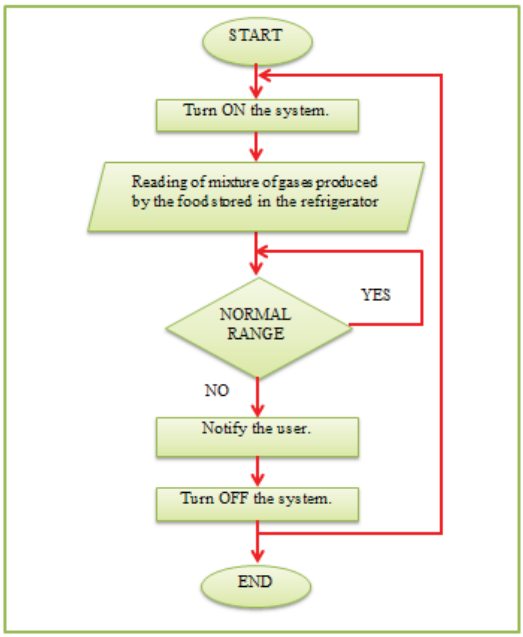

Fig. 2: Flow-chart of the smart refrigerator

IV. TESTING & RESULTS

This section presents experimental setup, testing and results conducted for each module of the system. Testing was done in two rooms with different range of temperature instead of in an actual refrigerator for purely experimental purposes. The tests done are for testing the reliability of the system as well as the functionality of the sensor. In these tests, the temperature of the two rooms were recorded to be between 32° C to 33° C and 22° C to 23° C respectively.

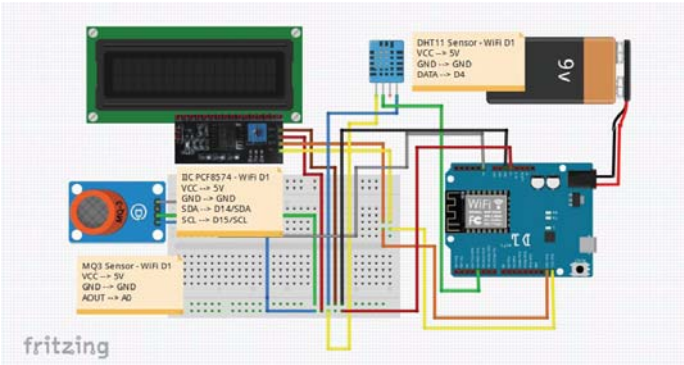

Fig. 3: System layout for experimental setup

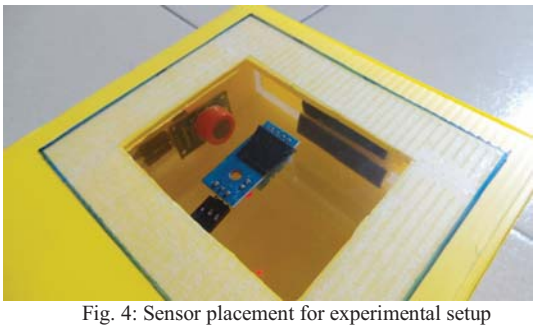

Fig. 4: Sensor placement for experimental setup

Figure 3 and Figure 4 illustrate the actual setup during the experiments. A small box is modeled as the refrigerator unit which contains food under observation toward rotten state.

a. Testing on sensor module

Odour sensor which is MQ3 sensor is used for qualitative monitoring of products in the refrigerator while DHT11 temperature and humidity sensor is used to measure the temperature and humidity. MQ3 sensor is tested with rotten food in order to find the correct range of reading to decide whether the food was rotten or not.

Figure 5 shows the data gained from each sensor from Arduino IDE to PLX-DAQ spreadsheet. This is the result from the first room temperature which is between 32° C to 33° C. The collected data the consistency of the monitoring process performed by the PLX-DAQ system connected to the Arduino.

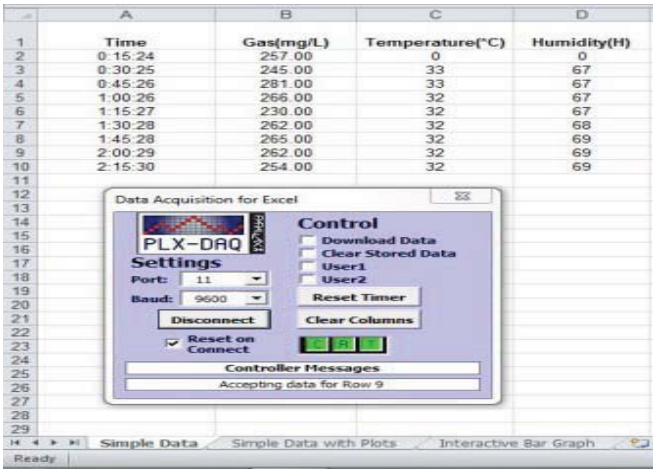

Time	Gas(mg/L)	Temperature(°C)	Humidity(H)
0:15:24	257.00	0	0
0:30:25	245.00	33	67
0:45:26	281.00	33	67
1:00:26	266.00	32	67
1:15:27	230.00	32	67
1:30:28	262.00	32	68
1:45:28	265.00	32	69
2:00:29	262.00	32	69
2:15:30	254.00	32	69

Fig. 5: Data recorded from sensors

Time	Gas(mg/L)	Temperature(°C)	Humidity(H)
12:29:12	168.00	0	0
12:44:13	175.00	22	95
12:59:13	250.00	23	93
13:14:14	270.00	23	92
13:29:15	239.00	22	89
13:44:15	202.00	22	87
13:59:16	220.00	22	85
14:14:16	228.00	22	81
14:29:17	224.00	23	82

Fig. 6: Data collected from sensors

On the other hand, Figure 6 describes the data gained from each sensor from the second room temperature which is between 22° C to 23° C.

b. Testing on WiFi module

This part of testing is to test the WiFi module as the user will receive notification or alert about the condition of their food stored in the refrigerator as well as to monitor the condition of their food through the channel connected with the system.

The figure below shows the sensors reading are displayed online via channel on ThingSpeak. The reading shown are updated as long as the user signed in his or her account on ThingSpeak, the system is turned on and connected to the internet.

Apart from user can view the sensors reading, the system will send the notification through Pushbullet application. This application will inform the user about the condition of the food especially when it becomes rotten.

Figure 7 and Figure 8 show notification received by the user through Pushbullet and channel view about the condition inside the refrigerator through ThingSpeak respectively.

V. CONCLUSION

Our IOT-based Smart Refrigerator System with sensors has been designed, constructed and tested. This system can be used by every household in homes and public buildings such as hotels and restaurants.

Fig. 7: Notification from Pushbullet

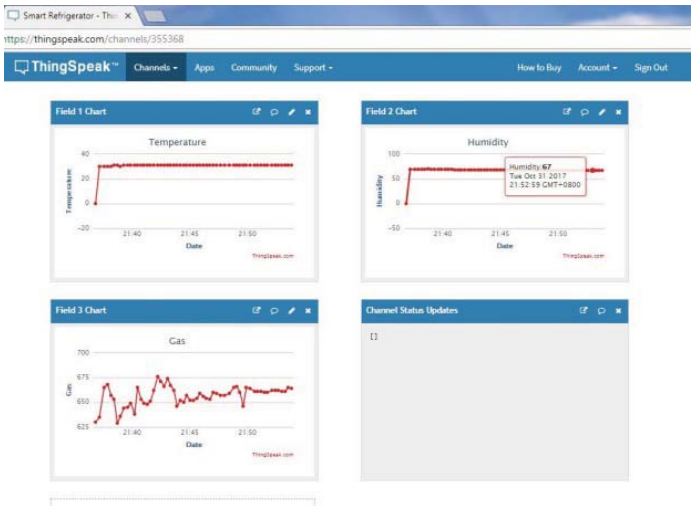

Fig. 8: Channel View on ThingSpeak

The only way to access the information is if the user is far from the home. It is a cost effective and time consuming solution. We can use this in various applications like home automation and restaurant management.

For future work, the smart refrigerator system will use ultrasound-scanning technology which will be built into the door. It can assess what type and amount of food are wasted by allowing the fridge to 'swipe and capture' the food on a plate before and after mealtime. Other than that, photo-electromagnetic sensors or cameras can be placed in the refrigerator so the user can see the contents in the fridge through their mobile application.

REFERENCES

[1] J. Chase, "The evolution of the Internet of Things," Texas Instruments Inc. 2013, www.ti.com/lit/ml/swrb028/swrb028.pdf

[2] *Samsung Smart Home Enrich Your Life*. 2017. .Retrieved from SAMSUNG: http://www.samsung.com/ca/smarthome/

[3] Prapulla S B, Dr. Shobha G, Dr. Thanuja T C.. Smart Refrigerator Using Internet Of Things. *Journal of* Internet of Things. *Journal of Multidisciplinary Engineering Science and Technology (JMEST)*, 2015.

[4] Deepti Singh, Preet Jain.. IoT Based Smart Refrigerator System. *International Journal of Advanced Research in Electronics and Communication Engineering (IJARECE),* 2016 *5*(7), 5.

[5] José Rouillard. The Pervasive Fridge. A smart computer system against uneaten food loss. *Seventh International Conference on Systems (ICONS2012)*, Feb 2012, Saint-Gilles, Réunion. pp. 135-140, 2012.

[6] Geremy Farr-Wharton, Jaz Hee-Jeong Choi, Marcus Foth. Technicolouring the Fridge: Reducing Food Waste through Uses of Colour-coding and Cameras. 3-7 2014.

[7] Pushbullet, https://www.pushbullet.com/

[8] ThingSpeak. https://thingspeak.com/

[9] Parallax Data Acquisition tool (PLX-DAQ) software add-in for Microsoft Excel. https://www.parallax.com/downloads/plx-daq

[10] Mehta, M. (2015, August). ESP 8266: A BREAKTHROUGH IN WIRELESS SENSOR NETWORKS AND INTERNET OF THINGS. *International Journal of Electronics and Communication Engineering & Technology, 6*(8), 5.

Nikhil Kakade, Prof. (Dr.) S. D. Lokhande. (2016, June). IoT based Intelligent home using Smart Devices. *International Journal of Innovative Research in Computer and Communication Engineering, 4*(6), 8.