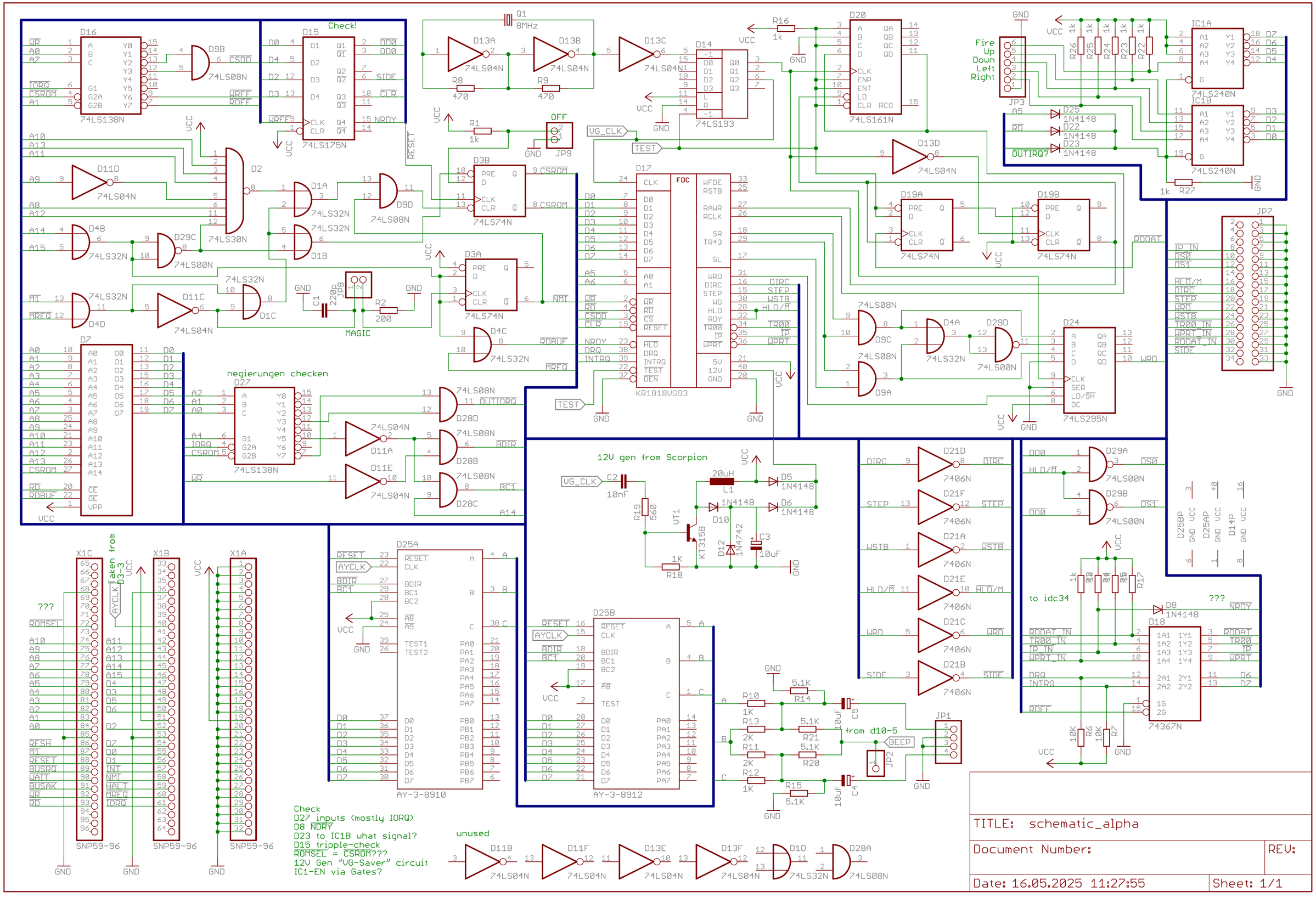
Check!
negierungen checken
MAGIC
12V gen from Scorpion
Taken from D3-3
???
Fire
Up
Down
Left
Right
to idc34
from d10-5
unused
Check
D27 inputs (mostly IORQ)
D8 NDRY
D23 to IC1B what signal?
D15 tripple-check
ROMSEL = CSROM???
12V Gen "VG-Saver" circuit
IC1-EN via Gates?
TITLE: schematic_alpha
Document Number:
REV:
Date: 16.05.2025 11:27:55
Sheet: 1/1