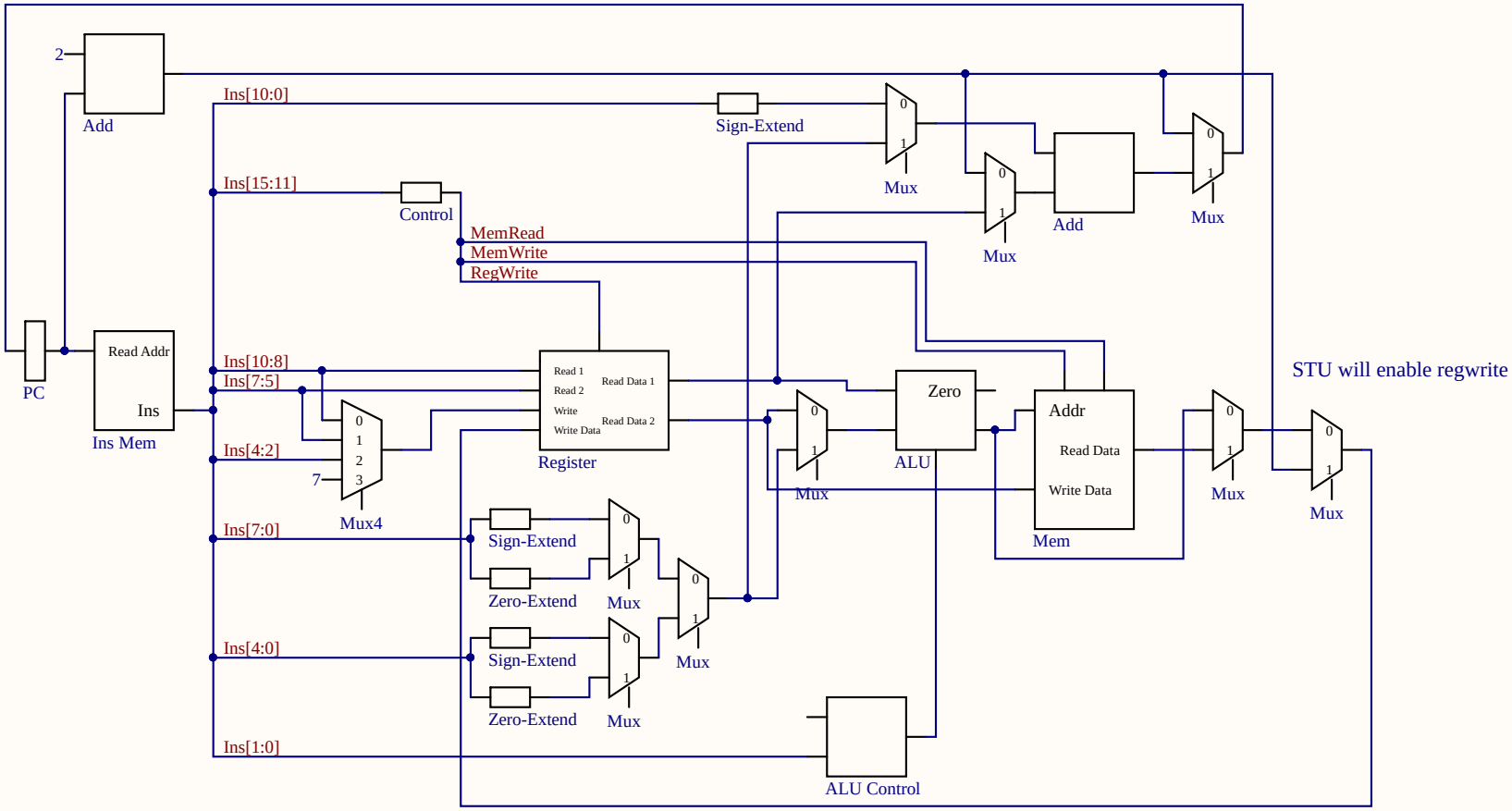

Title		
Size A	Number	Revision
Date: 2/24/2020		Sheet of
File: I:\ECE 552 CPU 2.SchDoc		Drawn By: