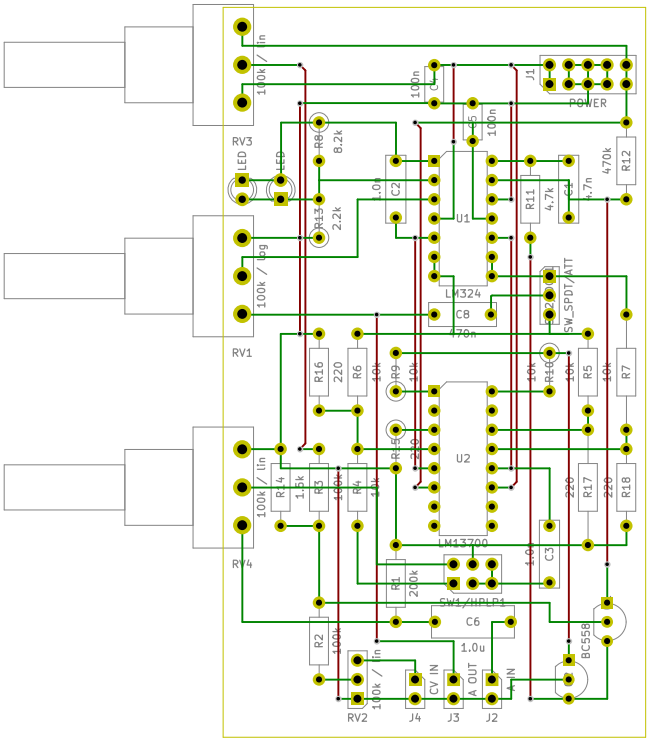

Sheet:
File: VCF_MS-20.kicad_pcb

Title:

Size: A4 | Date:

KiCad E.D.A. kicad 7.0.8