**ECE: CMOS References and Regulators** **(Date: 26/08/24)**

# Quiz - 1

*Instructors:* Prof. Abhishek Pullela and Dr. Zia Abbas *Max. Marks:* 30

**Instructions:**

- Write your assumptions (if required) for each question.

## Problem 1 (12 Marks)

Given an OTA which can be modelled as shown in Fig.1(a). It is used in the configuration as shown in Fig.1(b). Assuming $G_{m1} = G_{m2} = 10\mu S$, $R_1 = 100\Omega$, $C_0 = C_1 = 1pF$, $C_2 = 2fF$ $R_3 = R_4 = 10T\Omega$,
a) Draw the bode plot for the loop gain of the system by neglecting the sign(-ve/+ve) of the transfer function. Mention the locations of poles and zeroes and their nature (LHP/RHP).
b) Find the DC gain, phase margin and unity gain bandwidth.
c) Find the signs of the op-amp so that the whole configuration can be used as a non-inverting amplifier.

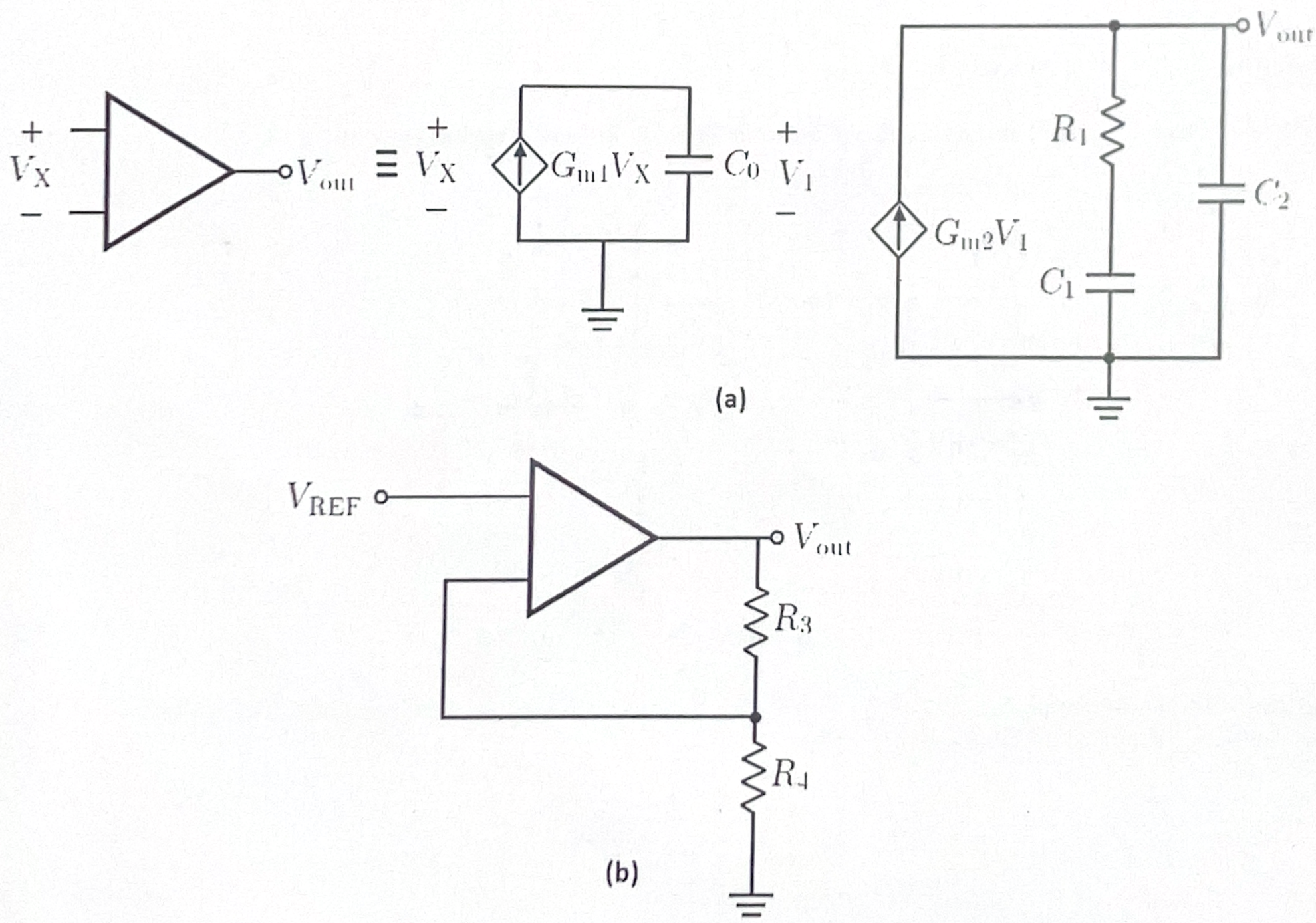


Figure 1

## Problem 2 (7 marks)

Draw the op-amp based non-inverting schmitt trigger configuration and hysteresis diagram assuming op-amp to be ideal. What are its thresholds if the supply voltages of the op-amp are $+V_{DD}$ and $-V_{SS}$?

**Problem 3 (5 marks)**

For the RC network assembled in Figure 2, input (In) is a pulse voltage whose value is zero for time (t) < 0 and 1V for time (t) > 0. What are the initial slopes of the voltage outputs out1 and out2 just after the instant t = 0? A brief explanation is required to justify your answer. Assume all the capacitors to be uncharged before t = 0.

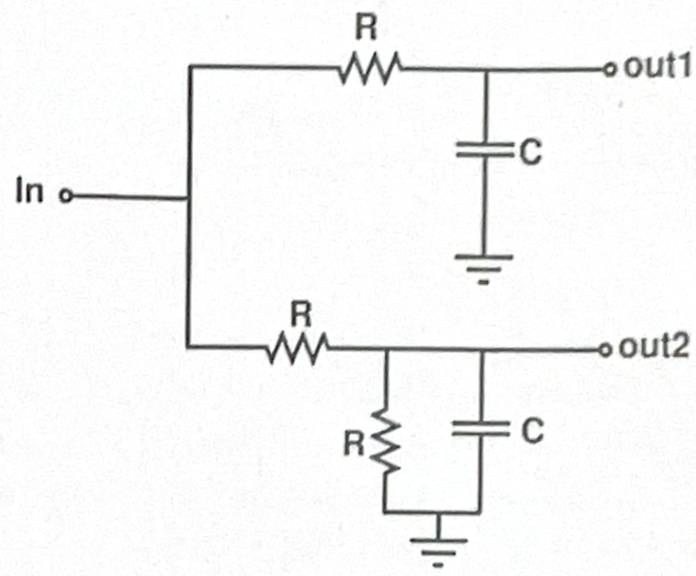


Figure 2

**Problem 4 (3 + 3 = 6 Marks)**

a) Find the equivalent output resistances for the circuits shown in Fig. 3(a) and Fig. 3(b).

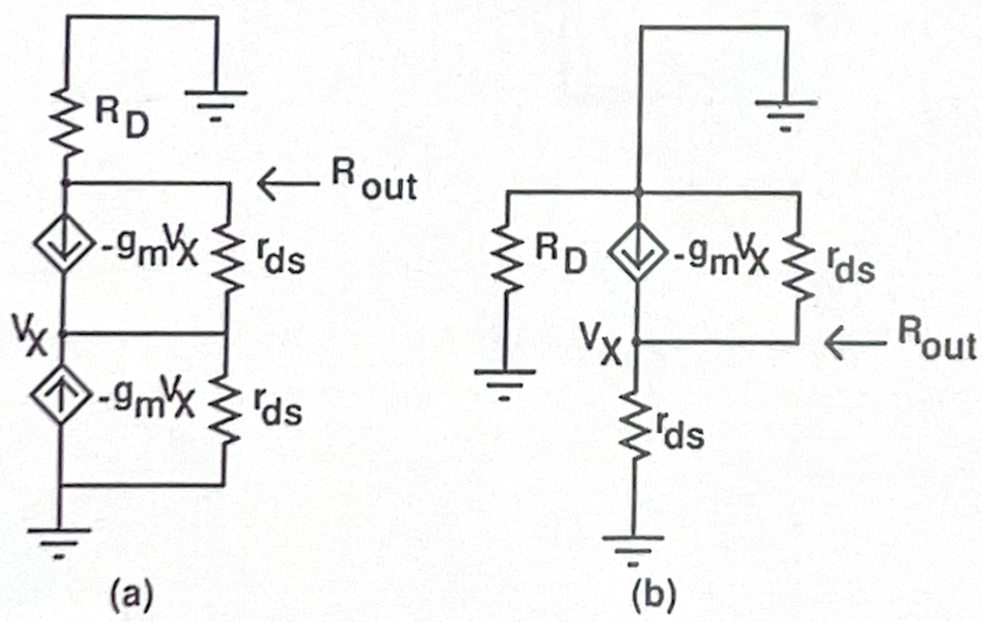


Figure 3

b) Find the suitable values of $R_1$, $R_2$, $R_3$, $R_4$, $V_1$, and $V_2$ for the case when the configuration in Fig.4 is in positive feedback. What is the final output voltage?

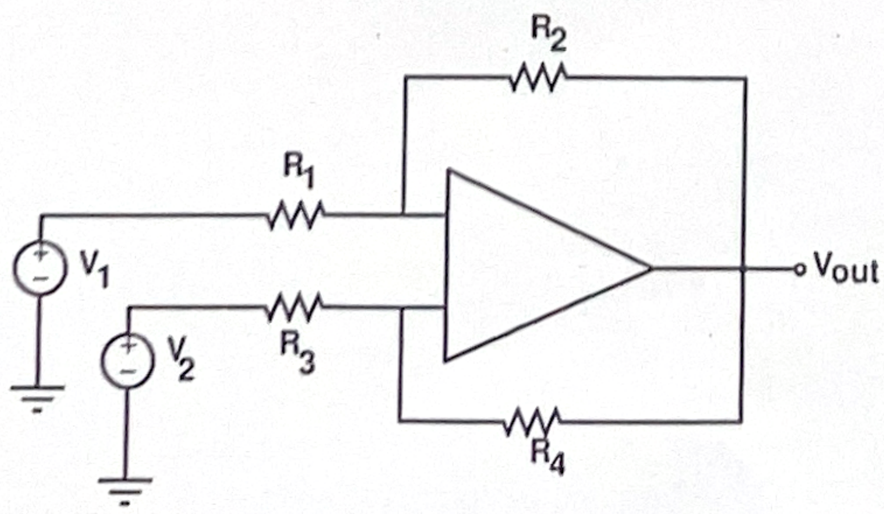


Figure 4