Analog IC Design : Quiz-2

Spring 2025, IIIT Hyderabad (Instructor: Prof. Abhishek Srivastava, CVEST)

Date : 18-Mar, 2025, Duration : 1 hr 15 min, Max Marks : 20

Instructions: 1) Clearly write your assumptions (if any), 2) Only 1 own hand written A4 sheet allowed, 3) **Do not ignore** channel length modulation or body effect unless stated

1. Consider the RC circuit shown in Fig. 1, where R = 10 kΩ and C = 10 pF. Considering power spectral density (PSD) of resistor noise is $4kTR\ V^2/Hz$,

   (a) Derive the expression for the output noise spectral density (V^2/Hz) and the total output integrated noise power ($P_{n_{out}} = v^2_{n_{out}}$) ($V^2$) for a bandwidth $BW = f_h - f_l$. [2]

   (b) Calculate $P_{n_{out}}$ for $BW = f_h - f_l = 10\ GHz - 1\ Hz$ (∞ BW). [1]

   (c) Calculate $P_{n_{out}}$ for $BW = f_h - f_l = 1\ MHz - 1\ kHz$. [1]

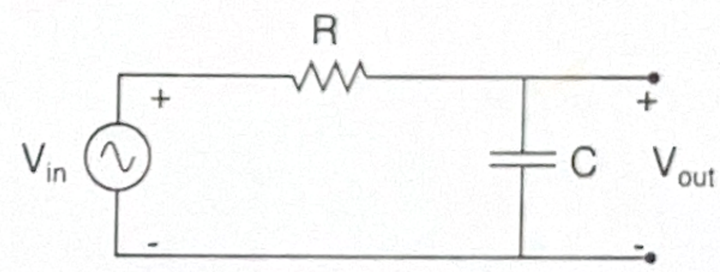

Figure 1

Where, $k = 1.38 \times 10^{-23}$ J/K, $T = 300$ K.

2. Fig. 2 shows the common source amplifier with drain feedback biasing, where a resistor and a capacitor (noiseless) are used for biasing. It is given that R_B = 10 MΩ, C_B = 1 F and $I_B = 100\ \mu A$. Derive the expressions for total output noise voltage (V^2/Hz) and input referred noise current (A^2/Hz) by considering thermal and flicker noise of M_1 and M_2. [6]

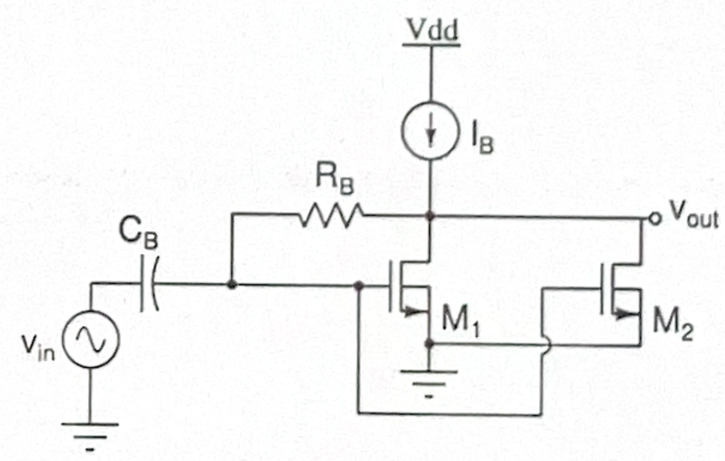

Figure 2

3. For the circuit shown in Fig. 3, it is given that $M_3 - M_5$ and $M_4 - M_6$ current mirrors have 1:2 ratio and mirror $M_7 - M_8$ has 1:1 ratio. Assume necessary matching and channel length modulation factor as 0. Derive the output short circuit noise current $\left(\overline{i^2_{nout(SC)}}\right)$ (A^2/Hz)

   (a) Only due to the flicker noise of M_3. [3]

   (b) Only due to the thermal noise of M_2. [3]

   (c) Only due to the thermal and flicker noise of M_{cascP}. [2]

   (d) Only due to the thermal and flicker noise of M_9. [2]

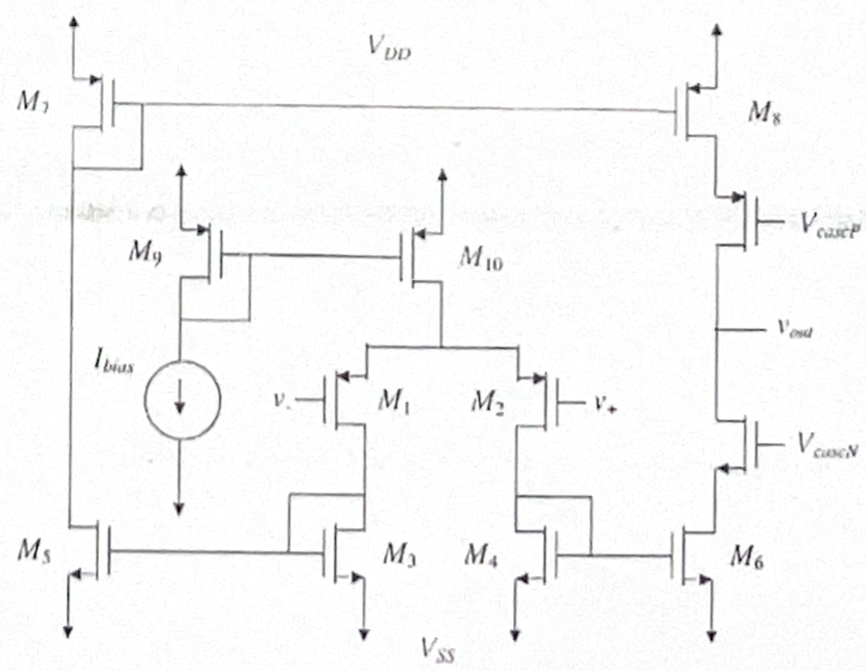

Figure 3

Good luck !!