A Q-Learning based Routing Optimization Model in a Software Defined Network

YUPENG WANG
Liaoning General Aviation Academy
Shenyang, China
College of Electronic and Information Engineering
Shenyang Aerospace University
Shenyang, China
ypwang@sau.edu.cn

XIN ZHOU
College of Electronic and Information Engineering
Shenyang Aerospace University
Shenyang, China

XINYUE FAN
Liaoning General Aviation Academy
Shenyang, China

2021 IEEE 19th International Conference on Embedded and Ubiquitous Computing (EUC) | 978-1-6654-0036-7/21/$31.00 ©2021 IEEE | DOI: 10.1109/EUC53437.2021.00029

Abstract: Aiming at the routing optimization problem of software defined network (SDN). A Q-learning based routing algorithm is proposed, which generates routing and forwarding rules to guarantee user QoS. A novel reward function adopted in the Q-learning model is proposed in this paper for the SDN with non-identical available bandwidth among routers and heterogeneous QoS packets. The proposed routing algorithm based on Q-learning considering both transmission bandwidth and delay, solves the routing optimization problem through the experience on the interactions among transmission environment, actions and rewards. By using the proposed algorithm, a routing strategy namely the Q table is obtained, and the data will be forwarded according to the Q table for transmission delay optimization. Through the simulation experiments, the proposed routing optimization algorithm based on Q-learning outperforms the conventional routing algorithm in the aspect of transmission delay.

Keywords: Software-defined network, Q-learning, Routing optimization, Quality of Service

I. INTRODUCTION

In recent years, the number of global network users has grown rapidly. At the same time, users' requirements for quality of service (QoS) have gradually increased. Due to the traditional control plane and data plane rely on hardware, and the hardware is integrated on a router host. The three parts of network equipment hardware, operating system and network application are tightly coupled together to form a closed system. These three parts are interdependent, and the innovation and evolution of each part requires the other parts to make the same upgrade. Such an architecture seriously hinders the development of the network innovation process. Moreover, routing control in a traditional distributed network architecture requires consideration of a large number of forwarding protocols, which makes it difficult to implement centralized deployment and intelligent control, and it is difficult to implement smart QoS deployment strategies. Software-Defined Networking (SDN) as a new-generation network architecture, SDN separates the control and forwarding planes so that the forwarding and control planes can evolve and innovate independently [1], [2]. This enables the SDN architecture to have a logically centralized control plane, eliminating the need for a large number of distributed control protocols, simplifies the network architecture, and is easy to maintain. Logical centralized control enables the SDN network to obtain a global view of the network, and can centralize calculation and control, which solves the problems of difficult network deployment, difficult network maintenance, and difficult calculation paths for distributed networks [3]. And it provides an architectural foundation for intelligent and dynamic deployment and routing strategies that guarantee user QoS [4].

Machine learning (ML) methods are widely used in computer vision, data processing and classification, intelligent decision-making, and *etc* [5]. Its important branch reinforcement learning (RL) can realize the real-time interaction between the agent and the environment，provides a suitable solution for the intelligent routing optimization

978-1-6654-0036-7/21/$31.00 ©2021 IEEE
DOI 10.1109/EUC53437.2021.00029

Authorized licensed use limited to: Chungbuk National Univ. Downloaded on April 14,2026 at 03:51:35 UTC from IEEE Xplore. Restrictions apply.

problem that SDN network urgently needs to be solved [6], [7]. The authors in [8] proposed a QoS traffic classification framework based on semi-supervised machine learning. But the algorithm does not further optimize the routing. In [9], a SDN-based multi-path routing system HiQoS (a new QoS solution based on SDN technology) are proposed, which modifies the shortest path algorithm so that it can calculate multiple paths that meet the QoS constraints and save the paths using a Hash map. However, this method is still based on shortest path algorithm, so it has lower efficiency and is not suitable for large-scale network environments. [10] proposes a QoS disjoint multi-path routing optimization method under multiple constraints. Through an improved heuristic search algorithm, the optimal solution can be obtained in polynomial time. But the heuristic algorithm has high computational complexity and requires a lot of storage space.

Therefore, Q-learning model in RL combined with the proposed reward function is applied into SDN to develop a dynamic routing algorithm based on QoS. The remaining part of this paper is organized as follows. The system model is introduced in section II. Section III describes the proposed Q-learning based routing algorithm. Verification results are presented in section IV. Section V draws conclusions.

II. System Model

A. SDN Network Architecture

SDN adopts a centralized control and distributed forwarding network architecture [11]. Figure 1 shows the architecture of SDN，which is divided into application plane, control plane and data plane from top to bottom [12]. The application plane realizes the logical processing of network information and the abstraction of the network model. The control plane is responsible for controlling network operations [13]. Logically centralized controller can obtain global information of network resources and perform global deployment and optimization of resources according to business needs. For example, traffic engineering, load balancing, user QoS guarantee, and *etc*. The data plane mainly includes general network forwarding facilities, and its main functions are: The data packet is grouped and forwarded through the strategy issued by the control plane [14]. And the exchange of network information with the control plane

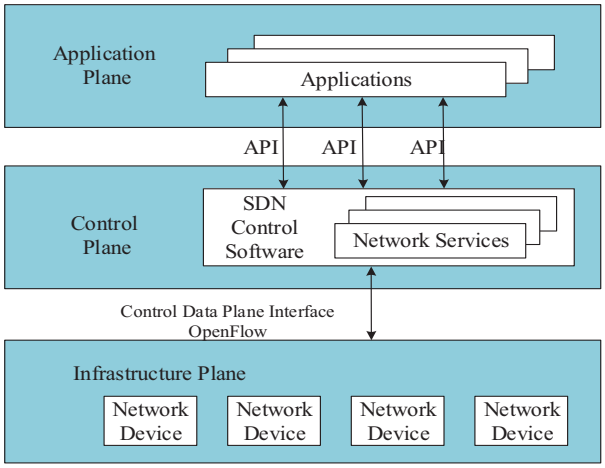

Fig.1: SDN Network Architecture

through the southbound protocol. The combination of SDN and virtualization enhances the scalability and flexibility of the network. SDN breaks the strong coupling structure of the traditional network and re-divide the network structure into three parts including application, control and infrastructure planes. And to form an SDN architecture with separation of control and forwarding planes [15]. Based on the three-tier architecture, the SDN network architecture has the following three typical characteristics.

- Decoupling of control plane and data forwarding plane. The control plane of the network element is on the logically centralized controller, and the controller is responsible for routing calculations, generating flow tables, and so on. The data plane is only responsible for data forwarding according to instructions issued by the controller.
- The network is programmable. Users can program on the controller to configure, control and manage the network without caring about the underlying hardware devices, thus speeding up the process of network service deployment.
- Logically centralized control. The forwarding equipment is controlled by the centralized controller. Controller issues the flow table to complete the centralized optimization control of the overall network, without the need to configure the device hardware one by one.

Authorized licensed use limited to: Chungbuk National Univ. Downloaded on April 14,2026 at 03:51:35 UTC from IEEE Xplore. Restrictions apply.

In the SDN architecture, OpenFlow is the first standard communication interface defined between the control and forwarding planes [16]. OpenFlow makes the deployment of SDN architecture a reality. The OpenFlow protocol implements the interface between the network infrastructure equipment and the SDN control software. OpenFlow uses the concept of flow to identify network traffic, and network traffic can be configured dynamically or statically. Since OpenFlow allows the network to be programmed on a per-flow basis, the OpenFlow-based SDN architecture can provide very accuracy control, enabling the network to respond to real-time changes in the application, user, and session plane. OpenFlow protocol is divided into two parts，one is a line protocol, which is used to establish control communication. The other is the configuration and management protocol, which assigns physical switch ports to specific controllers.

B. *Q-learning Model*

This paper uses reinforcement learning technology to achieve routing optimization, which is the third machine learning technology that is juxtaposed to supervised learning and unsupervised learning [17][18]. This paper selects the most widely used Q-learning model as the learning algorithm for SDN routing optimization [19]. The system block diagram of the algorithm is shown as in Fig. 2.

Q-learning model includes two parts: agent and environment. The agent chooses actions based on the current environment state. According to the action taken by the agent, the environment feedbacks to the agent a reward. The agent will continue to learn according to the rewards received until the algorithm converges. The Q-learning algorithm through dynamically perceive changes in the network environment and gains experience by interacting with environment to optimize network routing.

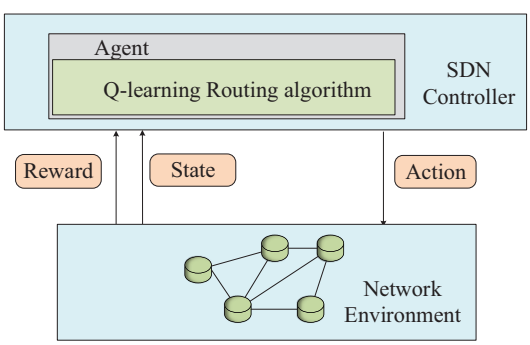

Fig. 2: illustration of Q-learning model adopted in SDN

The SDN control plane uses Q-learning algorithm to intelligently optimize routing. First, the control plane perceives network environment and obtains the global information of the network (including network topology information, traffic demand and so on). According to the current network status, the controller makes decisions based on the Q-learning algorithm. Then the SDN controller issues an action command (a flow table containing control information) to the switch. The switch forwards data according to the forwarding rules and feeds back to the agent for instant rewards, Q-learning updates the Q table according to the rewards obtained to make the next routing decision. The above actions are repeated many times until the Q table converges.

III. Proposed Routing Optimization Algorithm based on Q-learning Model

The proposed Q-learning based routing algorithm needs to determine the reward function, quality function, and action strategy. In order to lower down the transmission delay, a novel reward function adopted in the Q-learning model is proposed with non-identical available bandwidth among routers and heterogeneous QoS packets.

A. *Proposed Reward Function*

When the agent is in the state $s_{h,k}$ and executes the action $a_{h,k}$, it obtains the reward $R_{h,k}$ for the kth traffic and the hth hop. N_h is the number of hops for forwarding of route. this reward value is generated by the reward function $R_{h,k}\left(s_{h,k}, a_{h,k}\right)$. In this section, a reward function is proposed that suits the Q-learning routing algorithm. The agent finds the routing path with the maximum reward in order to minimize transmission delay. The configuration of the reward function considers the paths of switch indices. If the two switch indices are not connected, the reward value is set to be negative. If switch indices are connected, the reward function is calculated considering individual available bandwidth among routers and the packet QoS.

Authorized licensed use limited to: Chungbuk National Univ. Downloaded on April 14,2026 at 03:51:35 UTC from IEEE Xplore. Restrictions apply.

Compared with the conventional reward function, the following aspects are considered in the proposed one.

- Delay, which should be minimized as close to zero as possible.
- Bandwidth utilization, the higher the bandwidth utilization, the greater the reward is.

Thus, the proposed reward function as follows:

$$R_{i\to j}=R\left(i\to j|\, s_{h,k}, a_{h,k}\right) = \begin{cases} \beta_1\left(1-delay_{ij}\right) \\ +\beta_2\left(\dfrac{B_{\min}}{B_a}\right) & Y[i,j]=1 \\ +\beta_3(B_a-B_{\min}) \\ -1 & Y[i,j]\neq 1 \end{cases} \quad (1)$$

where i, j represent the switch indices in the network, Y represents the network topology matrix, here $Y[i,j]=1$ means switch i and j are connected, $Y[i,j]\neq 1$ means switch i and j are not connected. $R\left(i\to j|s_{h,k}, a_{h,k}\right)$ represents the reward value corresponding to $a_{h,k}$ in state $s_{h,k}$ And, $delay_{i,j}$ represents the transmission delay between switch indices, here $delay_{i,j}=\frac{T}{R_{ij}}$, T is the data volume of the data packet, R_{ij} represents the transmission rate between two switch indices, here $R_{ij}=SE*B_a$, SE is the spectral efficiency, B_a represents the available bandwidth of the link between two switch indices. And $\frac{B_{\min}}{B_a}$ represents bandwidth utilization, $B_{\min}$ represents the bandwidth requirement of the traffic. And β_1, β_2 are the QoS tunable weights. From (1), smaller delay and higher bandwidth utilization can achieve greater reward values. And when $B_{\min}$ is greater than B_a, the reward value is set to be a negative value, which means the path is not available.

B. *Routing Optimization Algorithm with the Proposed Reward Function*

To utilized the Q-learning algorithm in the routing optimization problem, the sets of states and actions should be configured first. For a specific SDN network, the environment state model of the agent can be established based on the topological matrix of the data plane. The topological relationship can be represented by a two-dimensional matrix **Y**. The network topology model established in this experiment is illustrated in Fig.3, which includes 10 switches. For the network topology environment of Fig.3, the state for the kth traffic $s_{h,k}=i$, $i\in[1,10]$, which means the data traffic has arrived at t*he* i^{th} *switch* and will be forwarded by it.

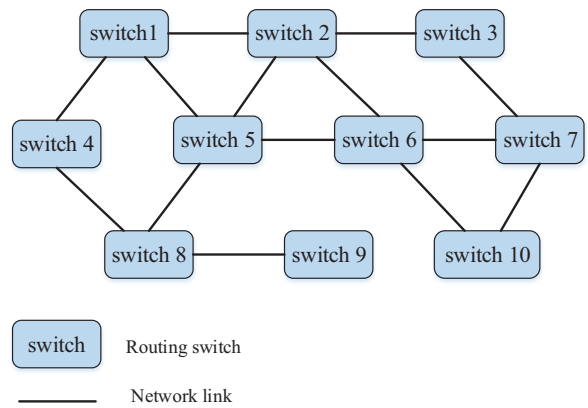

Fig. 3: Network topology model illustration.

When the agent perceives the state of the environment and traffic, it will take action a, which provides the only optimal solution for the current network environment. For the network topology environment of Fig.3, the action $a_{h,k}=i$ $, i\in[1,10]$ under the condition $Y[i,h]=1$,which means the data traffic is the receiving switch will arrive at the ith switch for the next hop.

Action policy specifies an agent's action selection. The policy key is the trade-off between exploration and exploitation. Exploration means that the agent chooses actions that have not been performed before, and exploitation means that the agent chooses actions that have been performed before. The formula of action policy π is as follows:

$$\pi\left(a|s\right)=p\left(a_{h,k}=a|s_{h,k}=s\right) \quad (2)$$

In (2), π represents the probability of the agent choosing action a in a certain state s. This paper chooses ε-greedy strategy as the action strategy of Q-learning. For the greedy policy, the agent takes the action with the highest quality at every step. It simply exploits the current agent's knowledge based on state and quality function, and does not explore

Authorized licensed use limited to: Chungbuk National Univ. Downloaded on April 14,2026 at 03:51:35 UTC from IEEE Xplore. Restrictions apply.

unknown states even higher quality may be obtain [20]. The ε-greedy strategy means that the agent has the probability of ε at each quality function update to randomly select the next action, and the probability of 1-ε selects the action with the highest quality of the current Q table as the next action. When ε=1, it is a random strategy; when ε=0, it is a greedy strategy, so $\varepsilon \in [0,1]$.

The Q-learning algorithm also needs to determine the quality update function $Q(s_{h,k}, a_{h,k})$, which represents the link quality for taking actions $a_{h,z}$ in state $s_{h,z}$, which is maximized over all the possible actions. The quality function update formula is：

$$\begin{aligned} &Q_{(h+1),k}\left(s_{h,k}, a_{h,k}\right) \leftarrow \\ &Q_{h,k}\left(s_{h,k}, a_{h,k}\right) + \\ &\alpha\left[R_{h,k} + \gamma \max_{a} Q_{h,k}\left(s_{(h+1),k}, a\right) - Q_{h,k}\left(s_{h,k}, a_{h,k}\right)\right] \end{aligned} \tag{3}$$

where $\gamma \in [0,1]$ is the discount rate, indicating the importance of future rewards to the current one. And $\alpha \in [0,1]$ is the learning rate determining the override extent of the newly acquired information to the old one, $R_{h,k}$ is the reward at hop h for the kth traffic, which is determined by (1).

The Figure 4 shows how to update the Q table in the Q-learning model. The Q table represents the quality value of an action selected by the agent in a specific state $s_{h,k}$. First initialize the Q table, then the agent chooses the action $a_{h,k}$ according to the action policy and the Q table. The real environment will give a reward value $R_{h,k}$ based on the action taken by the agent, which is set by the reward function. Finally, the Q table is updated according to the quality update function, and this is

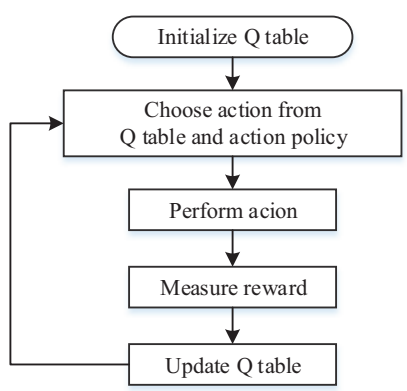

Fig.4 Q table update process

TABLE I: The pseudocode of the proposed routing optimization algorithm based on Q-learning

Algorithm 1 ： Routing optimization based on Q-learning
1 Initialize $Q(s,a)$
2 At hop h and state $s_{h,k}$
3 Choose a from $s_{h,k}$ using action policy in (2)
$\pi(a\|s) = p(a_{h,k}=a\|s_{h,k}=s)$
4 Take action a, calculate $R_{h,z}$ through the reward function in (1)
5 Observe $R_{h,z}$ and $s_{(h+1),k}$
6 Update $Q_{(h+1),k}$ based on (3)
7 Continue form step 4 to choose next action at hop h+1

repeated until the algorithm converges. The pseudocode of the proposed routing optimization algorithm based on Q-learning show in table I.

IV. Evaluation Results

A. Simulation Environment and Parameter Configuration

In order to verify the performance of the optimization algorithm in this paper, a numerical computer simulation platform is established to compare with the shortest path algorithm. To simplify the analysis, the spectral efficiency (*SE*) and total bandwidth B_t between each switch is normalized. In order to reflect the connection status between different routers, B_a (available bandwidth) is set to be a random number between (0-1). The data packet volume T for different service is randomly generated. $T_{\max}$ represents the maximum packet volume to transmit over all the packets, which is used as the denominator of the normalization process.

B. Evaluation Results

As shown in Fig.5, the evaluation results demonstrate that the proposed routing algorithm based on Q-learning can effectively reduce the network delay with the increased training steps. It is also proved that the performance of the proposed Q-learning algorithm optimization network is optimized through

Authorized licensed use limited to: Chungbuk National Univ. Downloaded on April 14,2026 at 03:51:35 UTC from IEEE Xplore. Restrictions apply.

training process. As shown in Fig.5, the optimal performance is obtained when the number of training is 5000.

In order to show that the proposed reward function can effectively reduce the network delay, Fig.6 presents the transmission delay comparison between the proposed Q-learning optimization algorithm with different greedy values and the conventional shortest path algorithm. The greedy value is set to be ε=1 (random strategy), ε=0.5 (equal exploration and exploitation), ε=0.8 (focus on exploration), ε=0.3 and ε=0.2 (focus on exploitation), respectively. The detailed results are summarized in table II, the algorithm has the best performance when ε=0.3. This indicates that when the proposed algorithm focuses on exploitation, the transmission delay is lower. Compared with the conventional shortest path algorithm, the average, median and maximum transmission delay of the proposed Q-learning optimization algorithm is only 56.62%, 66.89% and 30.42% of the shortest path algorithm when ε=0.3. The above results show that compared with conventional algorithm, the proposed reward function works effectively in the proposed Q-learning algorithm.

Because the network environment is often complex and variable, in order to verify the reliability and adaptability of the proposed routing optimization algorithm based on Q-learning, a disturbance δ is added to the available bandwidth between routes as in Fig. 7 and Fig. 8 with ε=0.3 and 1, respectively. The detailed results are summarized in Table III and IV. From the results we found that the proposed the Q-learning algorithm is insensitive to the disturbance under 30%. It can be seen that the Q-learning algorithm has good stability and adaptability, which is able to adapt to complex and various network environments.

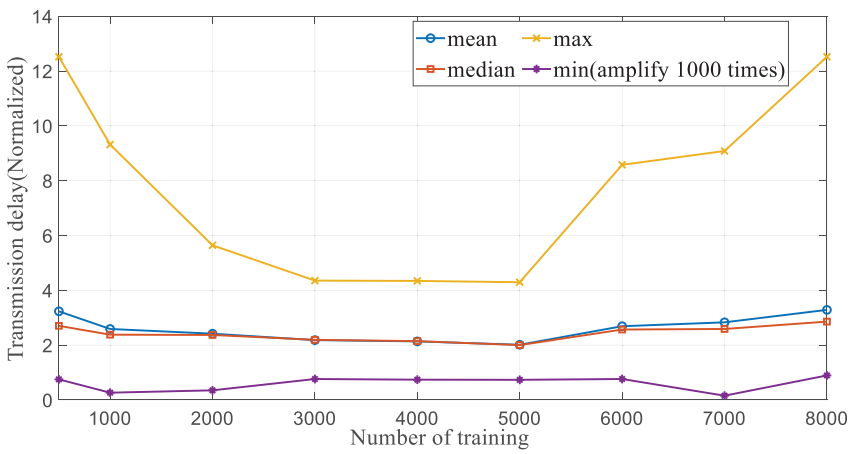

Fig 5. The normalized transmission delay of the proposed Q-learning algorithm (ε=0.3) under different training steps.

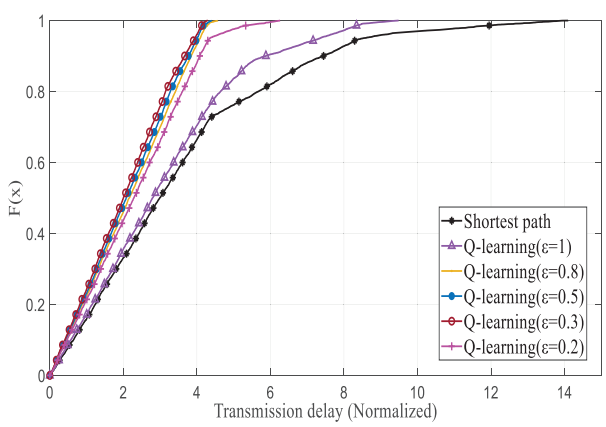

Fig.6 Normalized transmission delay CDF of different algorithm

TABLE II: Comparison on the normalized transmission delay for different routing algorithm

Routing algorithm	Mean (Gain)	Median (Gain)	Max (Gain)
Proposed Q-learning(ε=0.2)	2.31(34.93%)	2.28(23.75%)	6.26(55.60%)
Proposed Q-learning(ε=0.3)	2.01(43.38%)	2.00(33.11%)	4.29(69.57%)
Proposed Q-learning(ε=0.5)	2.08(41.41%)	2.07(30.77%)	4.40(68.79%)
Proposed Q-learning(ε=0.8)	2.16(39.15%)	2.16(27.76%)	4.57(67.59%)
Proposed Q-learning(ε=1)	3.06(13.80%)	2.79(6.69%)	9.48(32.77%)
Shortest Path	3.55	2.99	14.10

Authorized licensed use limited to: Chungbuk National Univ. Downloaded on April 14,2026 at 03:51:35 UTC from IEEE Xplore. Restrictions apply.

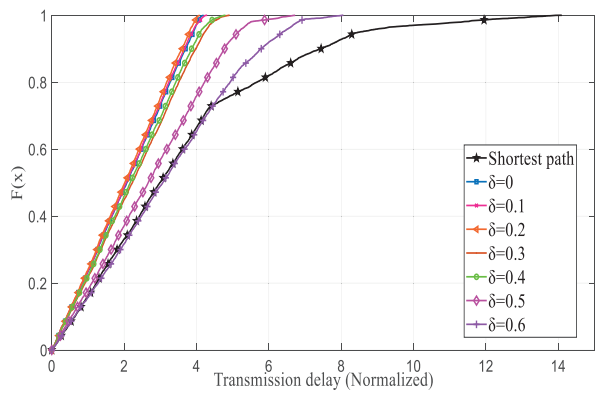

Fig 7. Normalized transmission delay CDF of Q-learning algorithm (ε=0.3) under different perturbation δ

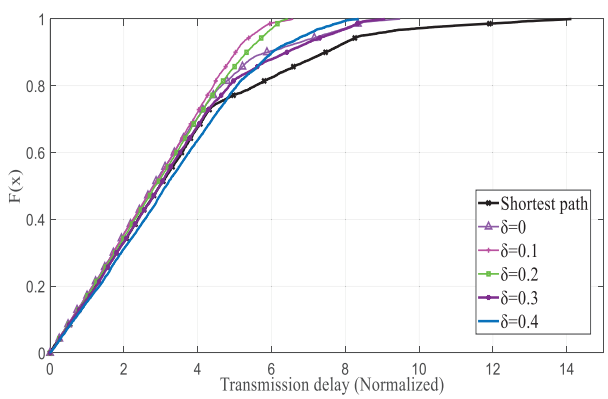

Fig 8. Normalized transmission delay CDF of Q-learning algorithm (ε=1) under different perturbation δ

TABLE III: Comparison on the normalized transmission delay for Q-learning algorithm

(ε=0.3) with different perturbation δ

Routing algorithm	Mean (Gain)	Median (Gain)	Max (Gain)
Proposed Q-learning(δ=0)	2.01(43.38%)	2.00(33.11%)	4.29(69.54%)
Proposed Q-learning(δ=0.1)	2.05(42.25%)	2.06 (31. 10%)	4.30(69.50%)
Proposed Q-learning(δ=0.2)	2.01(43.38%)	2.02(32.44%)	4.09(70.99%)
Proposed Q-learning(δ=0.3)	2.23(37.18%)	2.23(25.42%)	4.92(65.11%)
Proposed Q-learning(δ=0.4)	2.17(38.87%)	2.17(27.42%)	4.80(65.96%)
Proposed Q-learning(δ=0.5)	2.69(24.23%)	2.67(10.70%)	6.73(52.27%)
Proposed Q-learning(δ=0.6)	3.16(10.99%)	3.07(-0.27%)	8.06(42.84%)
Shortest Path	3.55	2.99	14.10

TABLEIV: Comparison on the normalized transmission delay for Q-learning algorithm (ε=1) with different perturbation δ

Routing algorithm	Mean (Gain)	Median (Gain)	Max (Gain)
Proposed Q-learning(δ=0)	3.06(13.80%)	2.79(6.69%)	9.48(32.77%)
Proposed Q-learning(δ=0.1)	2.82(20.56%)	2.81 (6.02%)	6.59(53.26)
Proposed Q-learning(δ=0.2)	2.92(17.75%)	2.85(4.68%)	6.44(54.33%)
Proposed Q-learning(δ=0.3)	3.21(9.58%)	2.97(0.67%)	9.08(35.60%)
Proposed Q-learning(δ=0.4)	3.28(7.61%)	3.15(-5.35%)	8.36(40.71%)
Shortest Path	3.55	2.99	14.10

V. CONCLUSIONS

Aiming at the QoS guarantee strategy of network users, this paper designs a network routing optimization model based on Q-learning in the SDN architecture. This optimization algorithm uses the Q-learning algorithm to intelligently plan routes, so as to realize intelligent control and management of the SDN network. Compared with traditional algorithms, the proposed algorithm enhances user QoS by reducing latency. Simulation results show that, compared with traditional shortest path algorithm, the proposed Q-learning based routing optimization algorithm can achieve around 69% gain on the transmission delay reduction at most. And the algorithm has environmental adaptability and stability. The algorithm can dynamically adjust to suit the network bandwidth and different users' delay requirements.

ACKNOWLEDGEMENT

This research is supported by the Safety Enhancement Construction Research Fund of Civil Aviation Administration

Authorized licensed use limited to: Chungbuk National Univ. Downloaded on April 14,2026 at 03:51:35 UTC from IEEE Xplore. Restrictions apply.

of China, the Key Research Project of Liaoning Provincial Department of Education (JYT19008), and Natural Science Foundation of Liaoning Province, China (2019-ZD-0220).

REFERENCES

[1] Liu C, Ju W, Zhang G, et al. A SDN-based active measurement method to traffic QoS sensing for smart network access [J]. Wireless Networks, 2020(2).

[2] Waseem Quadri et al. Future Technology: Software-Defined Network (SDN) Forensic [J]. Symmetry, 2021, 13(5): 767-767.

[3] Xiong F, Li A, Wang H, et al. An SDN-MQTT based communication system for battlefield UAV swarms [J]. IEEE Communications Magazine, 2019, 57 (8):41-47.

[4] Wang J, De Laat C, Zhao Z, et al. QoS-aware virtual SDN network planning [J]. Immuno-technology, 2017:644-647.

[5] Liu C, Ju W, Zhang G, et al. A SDN-based active measurement method to traffic QoS sensing for smart network access [J]. Wireless Networks, 2020(2).

[6] Boutaba R, Salahuddin M A, Limam N, et al. A comprehensive survey on machine learning for networking: evolution, applications and research opportunities [J]. Journal of Internet Services and Applications, 2018, 9 (1):1-99.

[7] Fadlullah Z, Tang F, Mao B, et al. State-of-the-art deep learning: evolving machine intelligence toward tomorrow's intelligent network traffic control systems [J]. IEEE Communications Surveys & Tutorials, 2017:1-1.

[8] Wang P, Lin S C, Luo M. A Framework for QoS-aware Traffic Classification Using Semi-supervised Machine Learning in SDNs[C]. 2016 IEEE International Conference on Services Computing (SCC), San Francisco, CA, USA, 2016, pp.760-765.

[9] Yan J Y, Zhang H L, Shuai Q J. HiQoS; an SDN-based multipath QoS solution [J]. China Communications, 2015, 12(5):123-133.

[10] Pan Q F, Zheng X H. Multi-path SDN route selection subject to multi-constraints[C]. Third International Conference on Cyberspace Technology (CCT 2015), Beijing, 2015, pp.1-5.

[11] Akyildiz I F, Lee A, Wang P, et al. A roadmap for traffic engineering in SDN-OpenFlow networks [J]. Computer Networks, 2014, 7: 1-30.

[12] ONF. SDN Architecture Issue 1.l [OL]. https://www.itu.int/md/T13-SG13-160429-TD-WP3-0413, [2018-10-23].

[13] S. Sezer et al., “Are we ready for SDN? Implementation challenges for software-defined networks,” Commun. Mag., vol. 51, no. 7, pp. 36–43, 2013.

[14] H. Yao, T. Mai, X. Xu, P. Zhang, M. Li, and Y. Liu, “Network AI: An intelligent network architecture for self-learning control strategies in software defined networks,” IEEE Int. Things. J., vol. 5, no. 6, pp. 4319–4327, 2018.

[15] Kim S, Son J, Talukder A, et al. Congestion prevention mechanism based on Q-leaning for efficient routing in SDN[C]//International Conference on Information Networking.2016.

[16] N. McKeown, T. Anderson, H. Balakrishnan, G. Parulkar, L. Peterson,J. Rexford, S. Shenker, , and J. Turner, “Openflow: Enabling innovation in campus networks,” ACM SIGCOMM Comput. Commun. Rev., vol. 38, no. 2, pp. 69–74, Apr. 2008.

[17] Carlos Ferreira and Susana Sargento and Arnaldo Oliveira. ArchSDN: a reinforcement learning-based autonomous OpenFlow controller with distributed management properties [J]. SN Applied Sciences, 2020, 2(9):30-32.

[18] Fang C, Cheng C, Tang Z, et al. Research on Routing Algorithm Based on Reinforcement Learning in SDN[J]. Journal of Physics Conference Series, 2019, 1284:012053.

[19] Zhang Z, Wang D, Gao J. Learning Automata-Based Multiagent Reinforcement Learning for Optimization of Cooperative Tasks [J]. IEEE Transactions on Neural Networks and Learning Systems, 2020:1-14.

[20] Lin S C, Akyildiz I F, Pu W, et al. QoS-Aware Adaptive Routing in Multi-layer Hierarchical Software Defined Networks: A Reinforcement Learning Approach[C]// IEEE International Conference on Services Computing. IEEE, 2016.

Authorized licensed use limited to: Chungbuk National Univ. Downloaded on April 14,2026 at 03:51:35 UTC from IEEE Xplore. Restrictions apply.