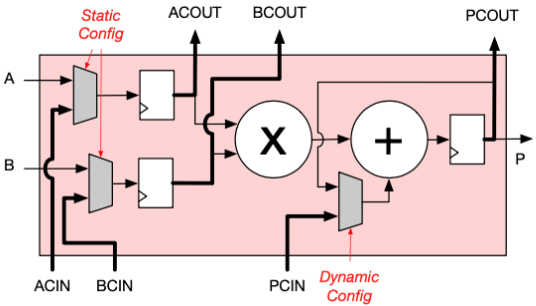

(a) DSP48 cascade (891 MHz)

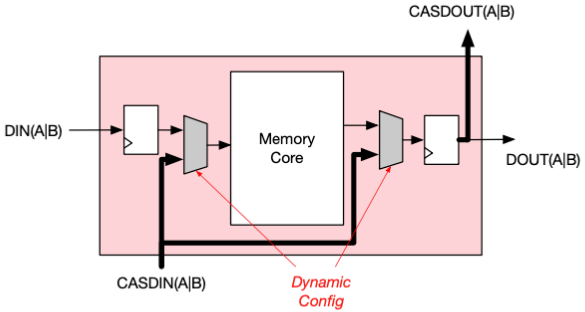

(b) RAMB18 cascade (825 MHz))

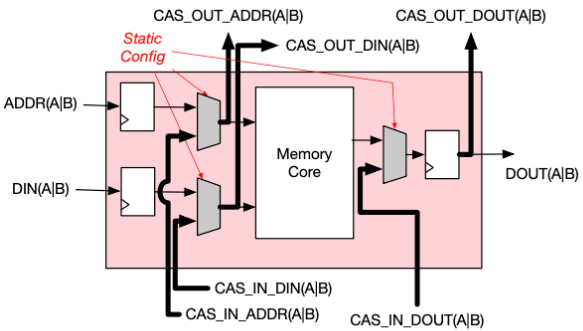

(c) URAM288 cascade (650 MHz)