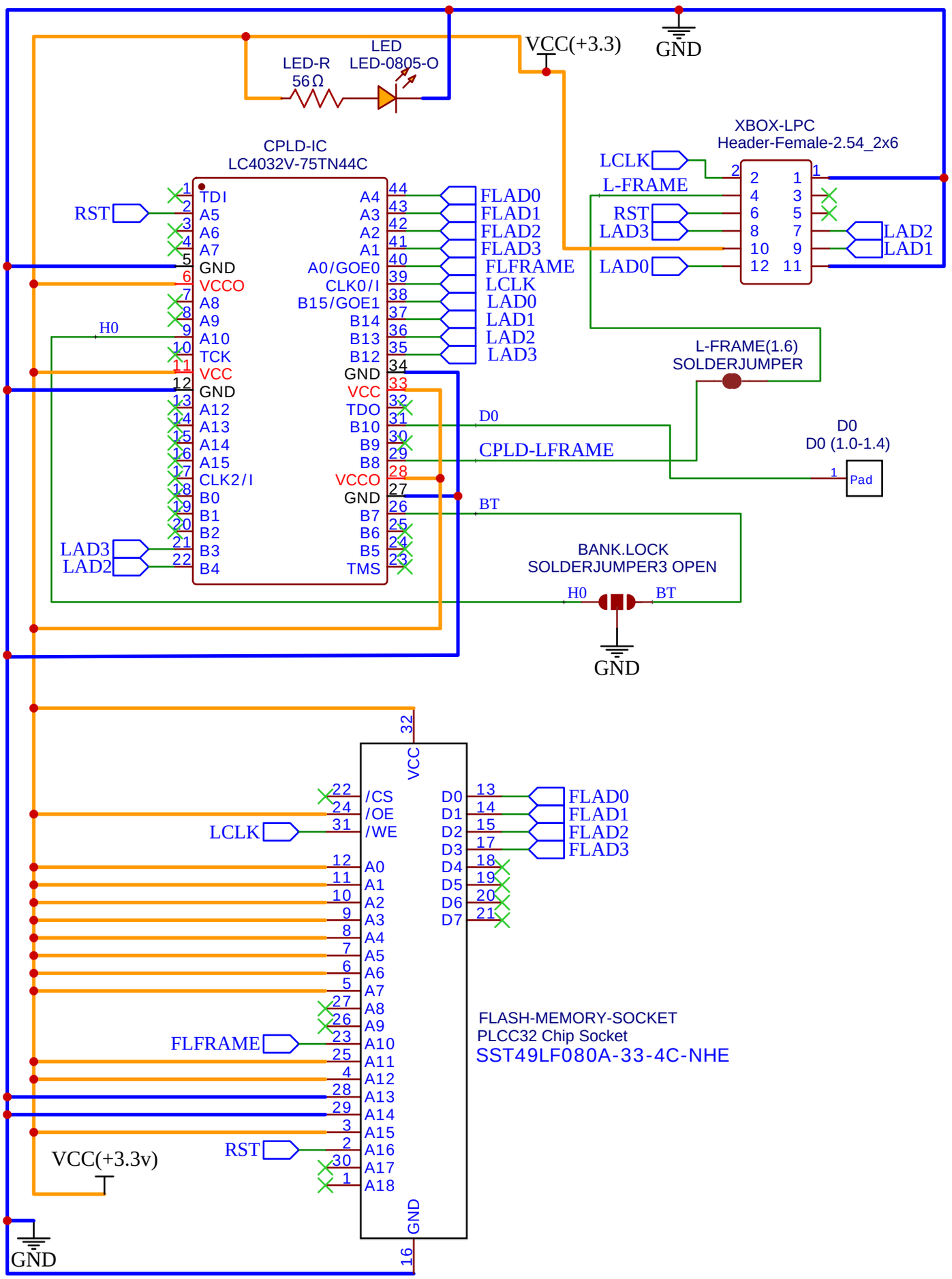

TITLE: Xblast Jafar Chip - Socket Edition

REV: 5.0

Company: TK's Custom Super Modz LLC

Sheet: 1/1

Date: 09-11-2024

Drawn By: Tony Kuberka