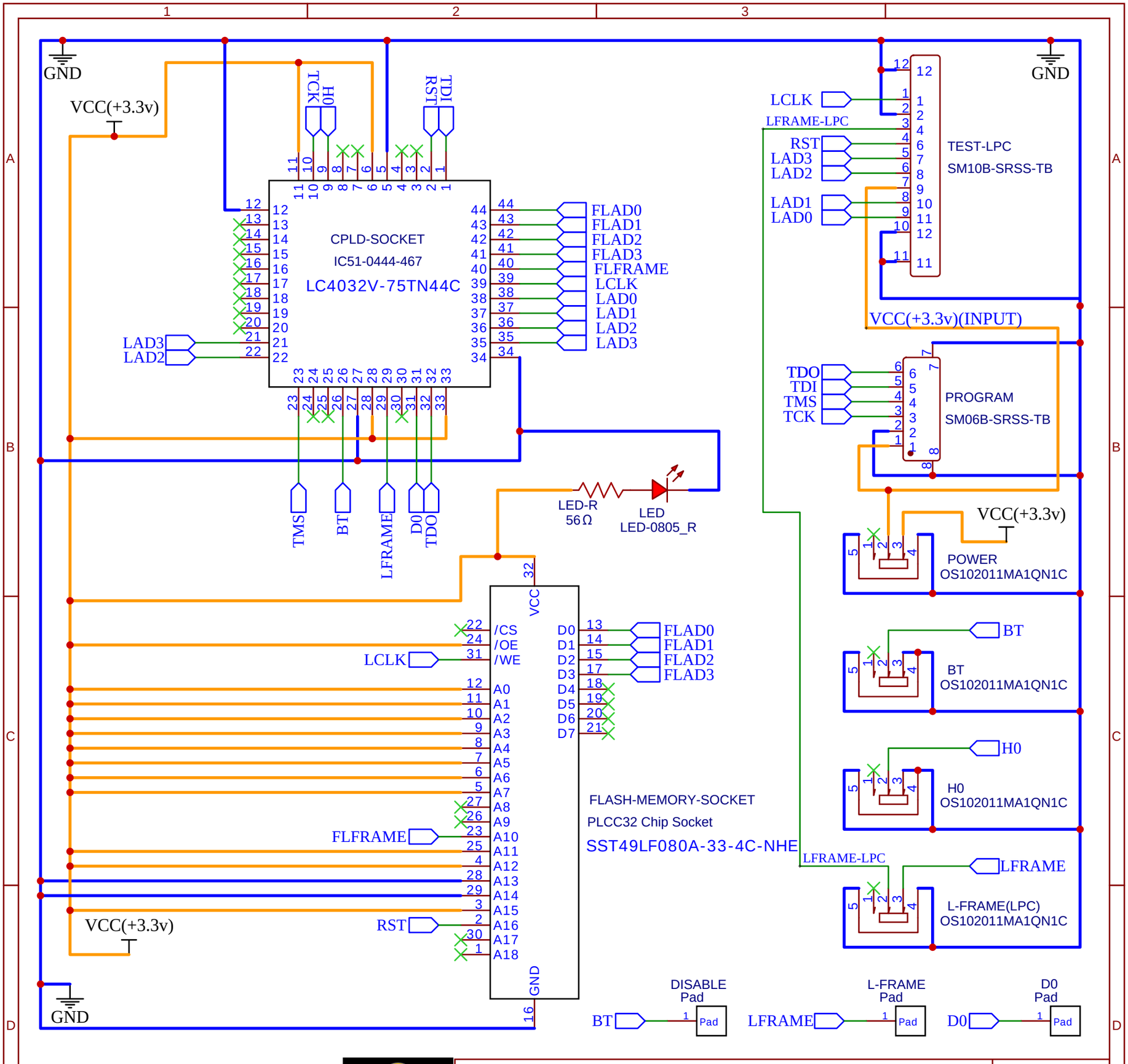

TITLE: Jafar Chip - Programmer/Tester

REV: 5.0

Company: TK's Custom Super Modz LLC

Sheet: 1/1

Date: 10-05-2024

Drawn By: Tony Kuberka