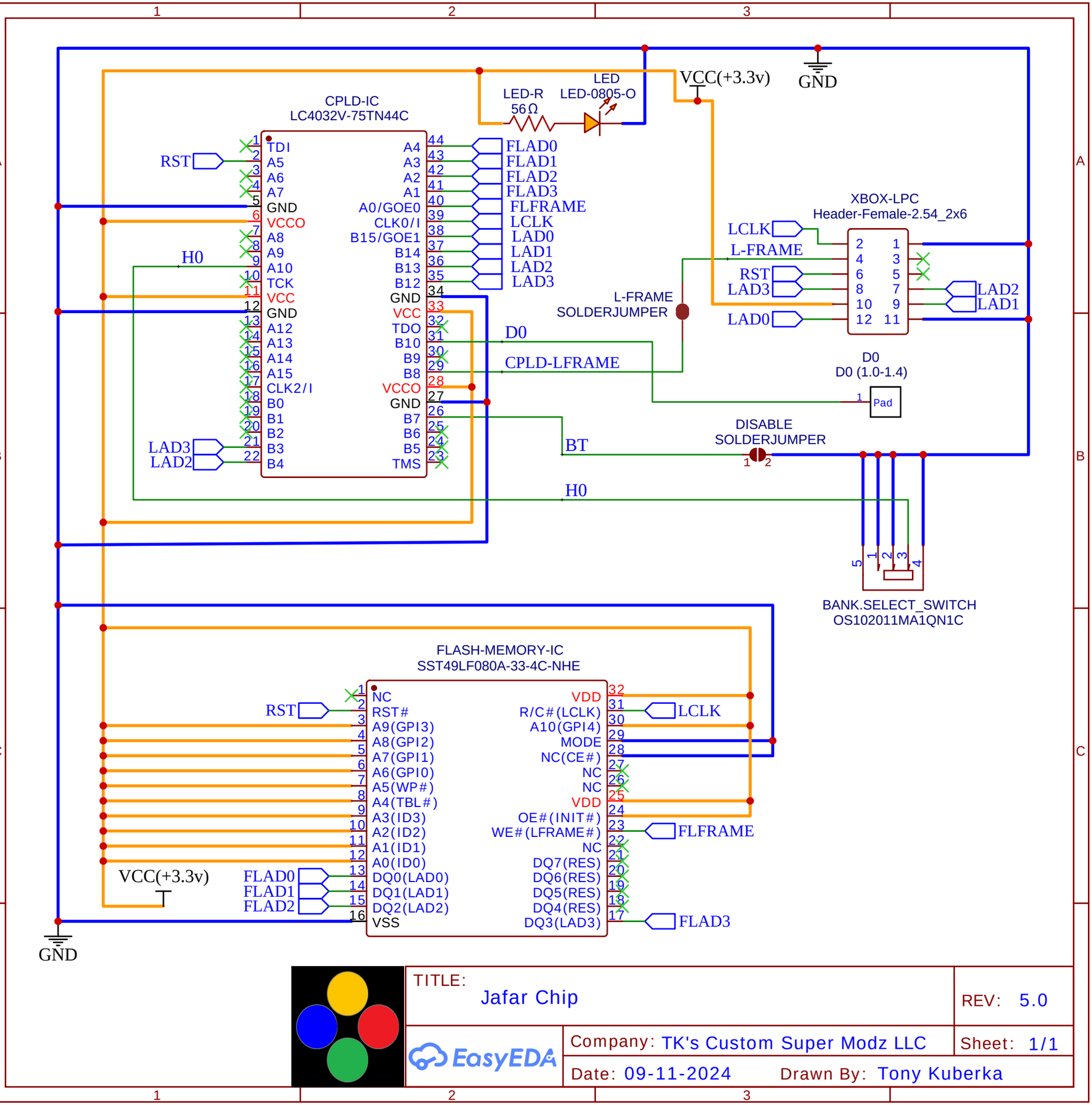
CPLD-IC
LC4032V-75TN44C
TDI
A5
A6
A7
GND
VCCO
A8
A9
A10
TCK
VCC
GND
A12
A13
A14
A15
CLK2/I
B0
B1
B2
B3
B4
A4
A3
A2
A1
A0/GOE0
CLK0/I
B15/GOE1
B14
B13
B12
GND
VCC
TDO
B10
B9
B8
VCCO
GND
B7
B6
B5
TMS
RST
H0
LAD3
LAD2
FLAD0
FLAD1
FLAD2
FLAD3
FLFRAME
LCLK
LAD0
LAD1
LAD2
LAD3
LED-R
56Ω
LED
LED-0805-O
VCC(+3.3v)
GND
XBOX-LPC
Header-Female-2.54_2x6
LCLK
L-FRAME
RST
LAD3
LAD0
LAD2
LAD1
L-FRAME
SOLDERJUMPER
D0
CPLD-LFRAME
D0
D0 (1.0-1.4)
Pad
DISABLE
SOLDERJUMPER
BT
H0
BANK.SELECT_SWITCH
OS102011MA1QN1C
FLASH-MEMORY-IC
SST49LF080A-33-4C-NHE
NC
RST#
A9(GPI3)
A8(GPI2)
A7(GPI1)
A6(GPI0)
A5(WP#)
A4(TBL#)
A3(ID3)
A2(ID2)
A1(ID1)
A0(ID0)
DQ0(LAD0)
DQ1(LAD1)
DQ2(LAD2)
VSS
VDD
R/C#(LCLK)
A10(GPI4)
MODE
NC(CE#)
NC
NC
VDD
OE#(INIT#)
WE#(LFRAME#)
NC
DQ7(RES)
DQ6(RES)
DQ5(RES)
DQ4(RES)
DQ3(LAD3)
RST
LCLK
FLFRAME
FLAD3
VCC(+3.3v)
FLAD0
FLAD1
FLAD2
GND
TITLE:
Jafar Chip
REV: 5.0
Company: TK's Custom Super Modz LLC
Sheet: 1/1
Date: 09-11-2024
Drawn By: Tony Kuberka
EasyEDA