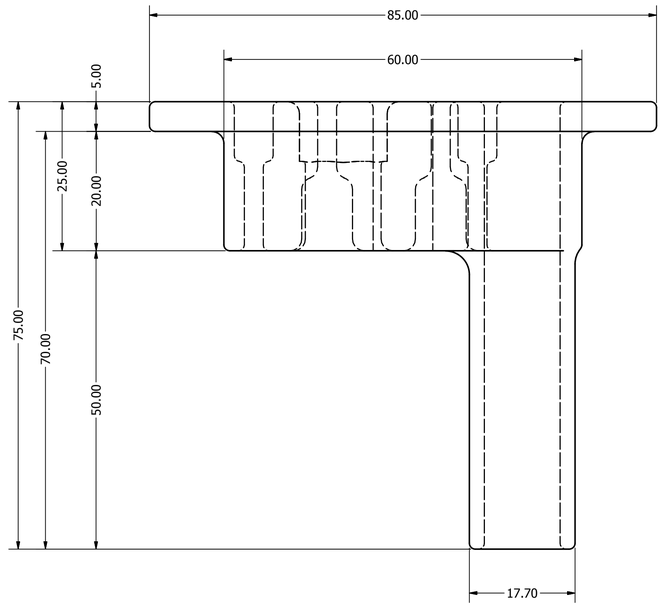

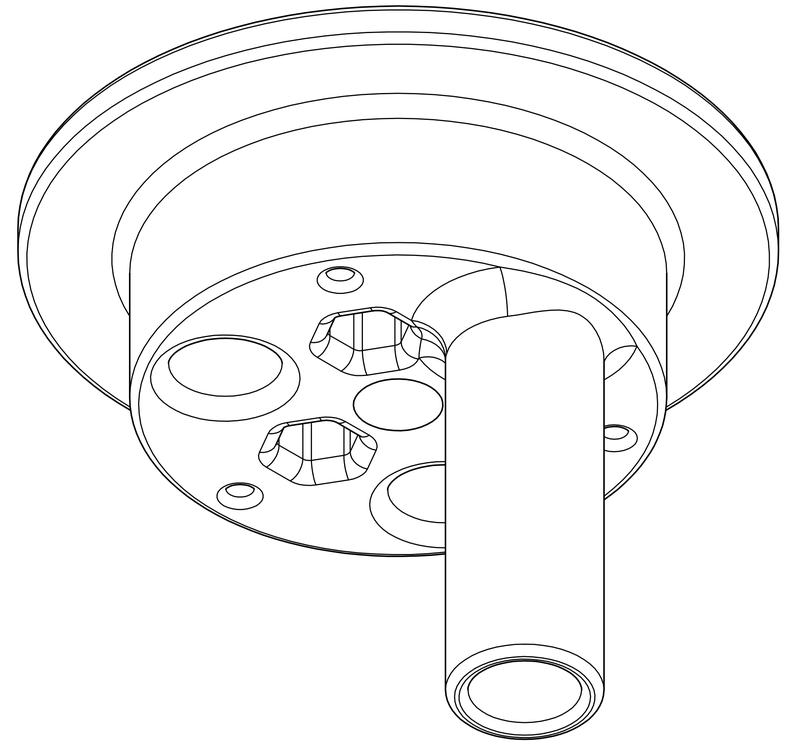

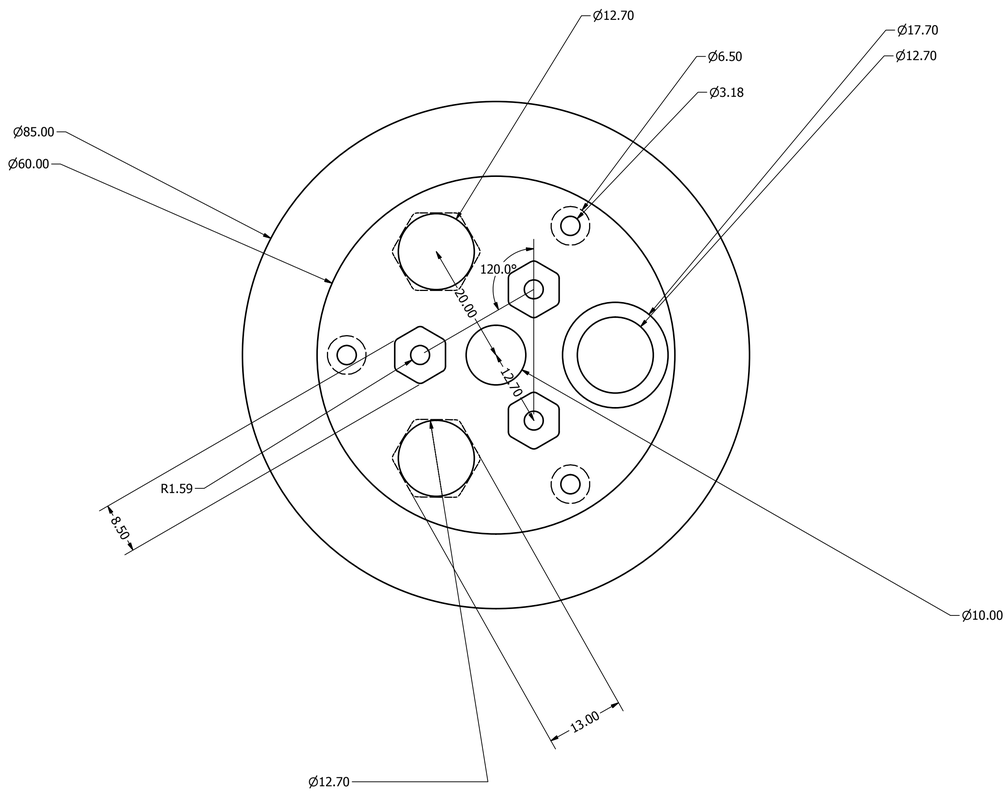

DRAWN AdditiveFutures	3/21/2018			
CHECKED		TITLE		
QA				
MFG				
APPROVED		SIZE D	DWG NO top	REV
		SCALE 2 : 1	SHEET 1 OF 1	