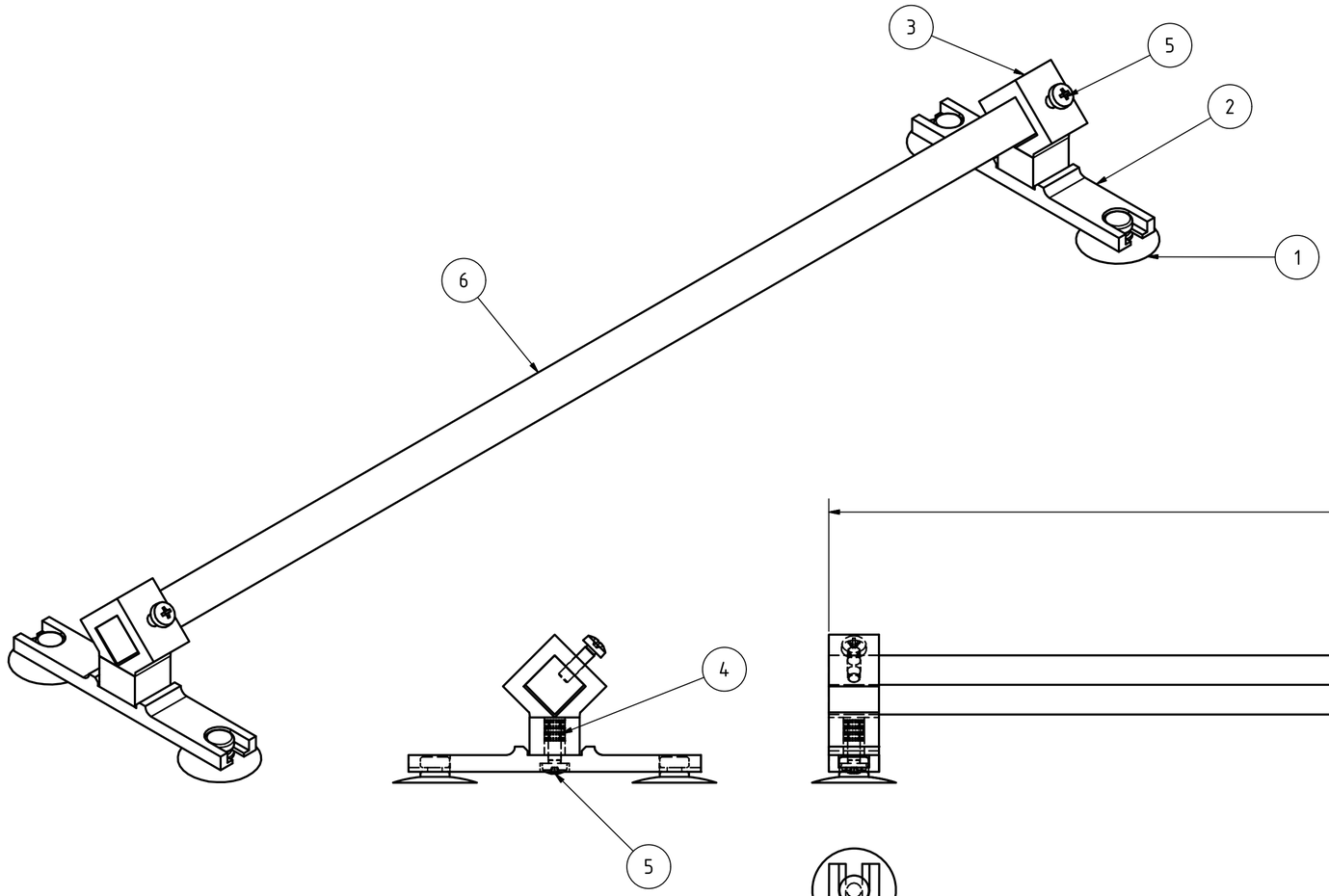

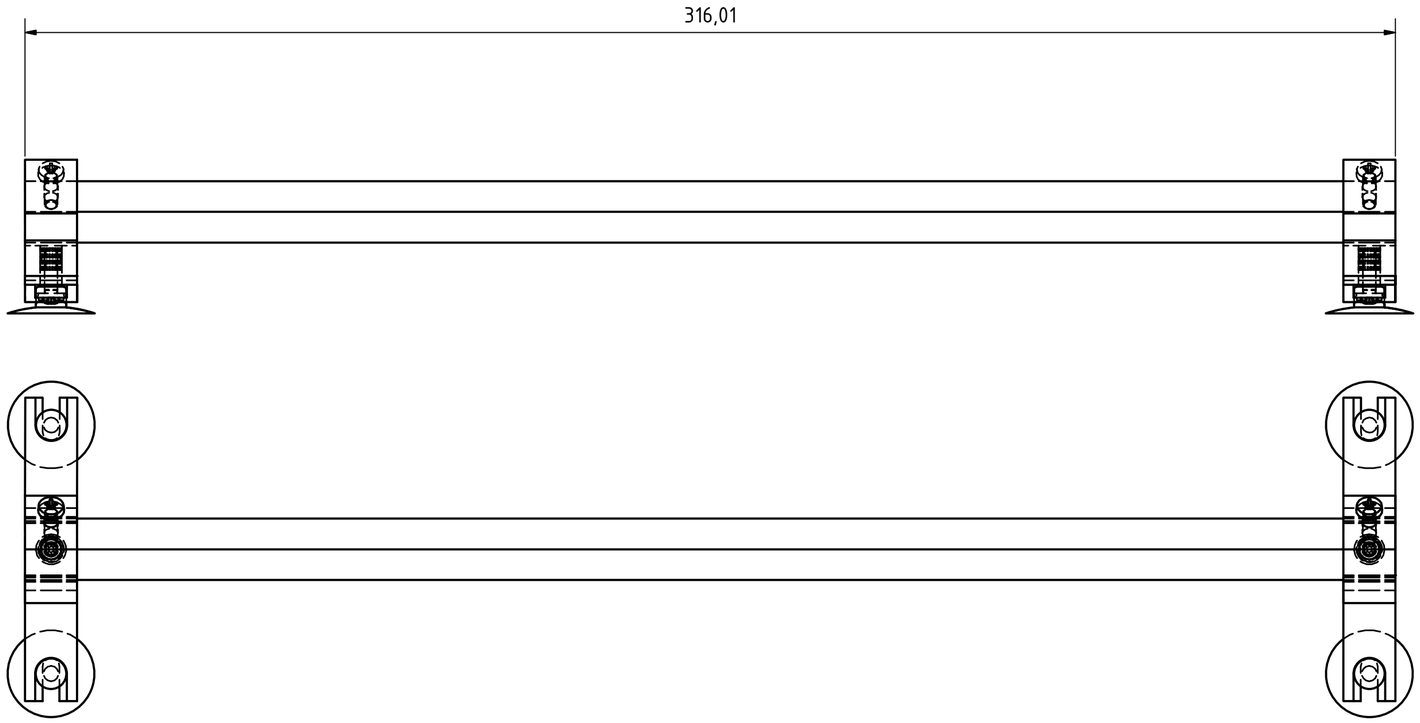

PARTS LIST			
ITEM	QTY	PART NUMBER	DESCRIPTION
1	4	saugnapf-20mm-od	
2	2	LIGHT-ROD-HOLDER-3DP	
3	2	LIGHT-ROD-HOLDER-UPPER-3DP	
4	2	M3-Insert-for-3DP	
5	4	DIN 7985 (Z) - M3x10-Z	Cross recessed raised cheese head screws - Type Z
6	1	LIGHT-ALUMINIUM-PROFILE	

	Date	Name
Drawn	10.11.2018	ijon
Checked		
Standard		

State | Changes | Date | Name

Libreflip Light Assembly

1

A2