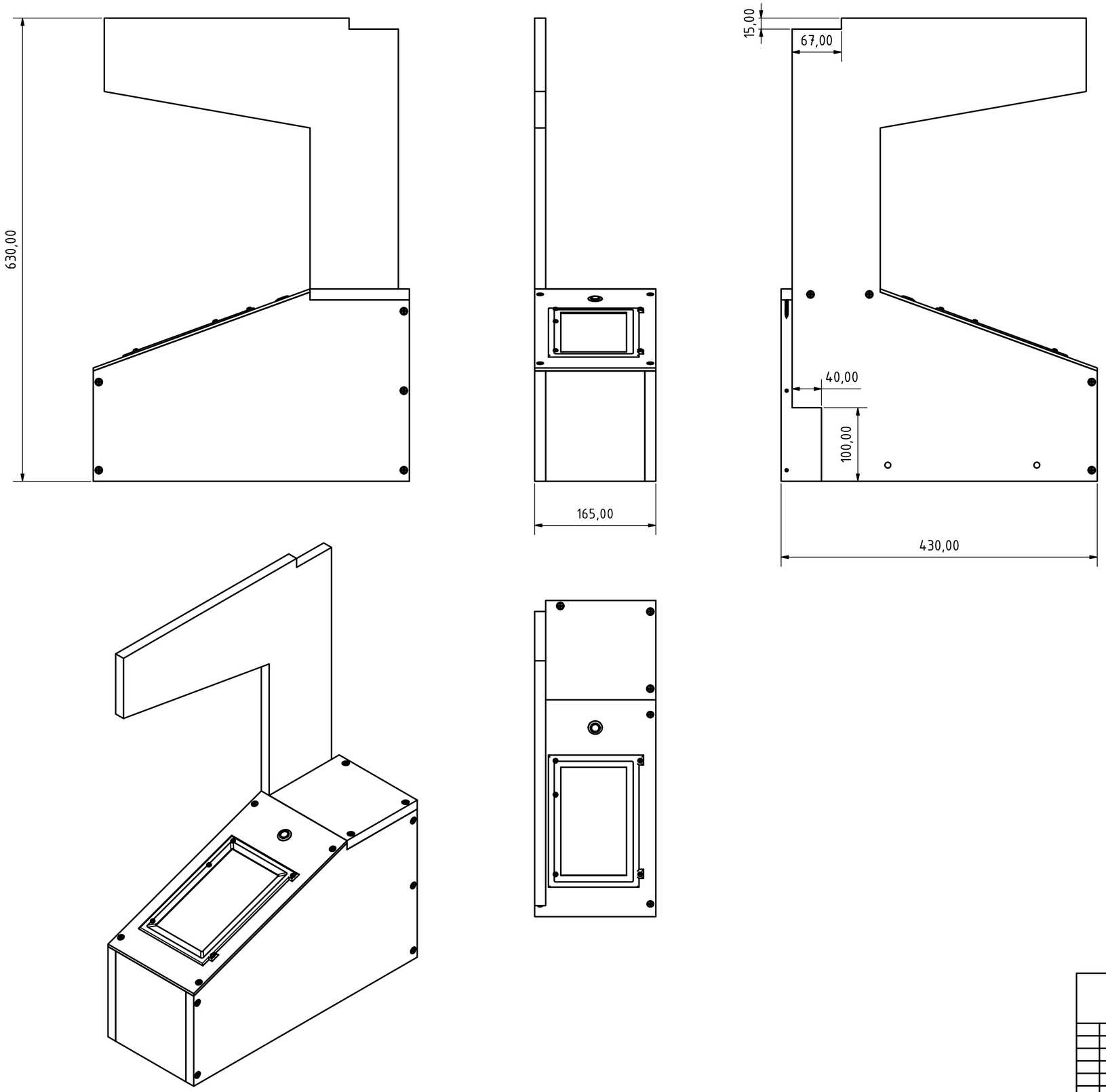

					Date	Name
				Drawn	21.03.2017	ijon
				Checked		
				Standard		
State	Changes	Date	Name			

electronic-housing

1

A2

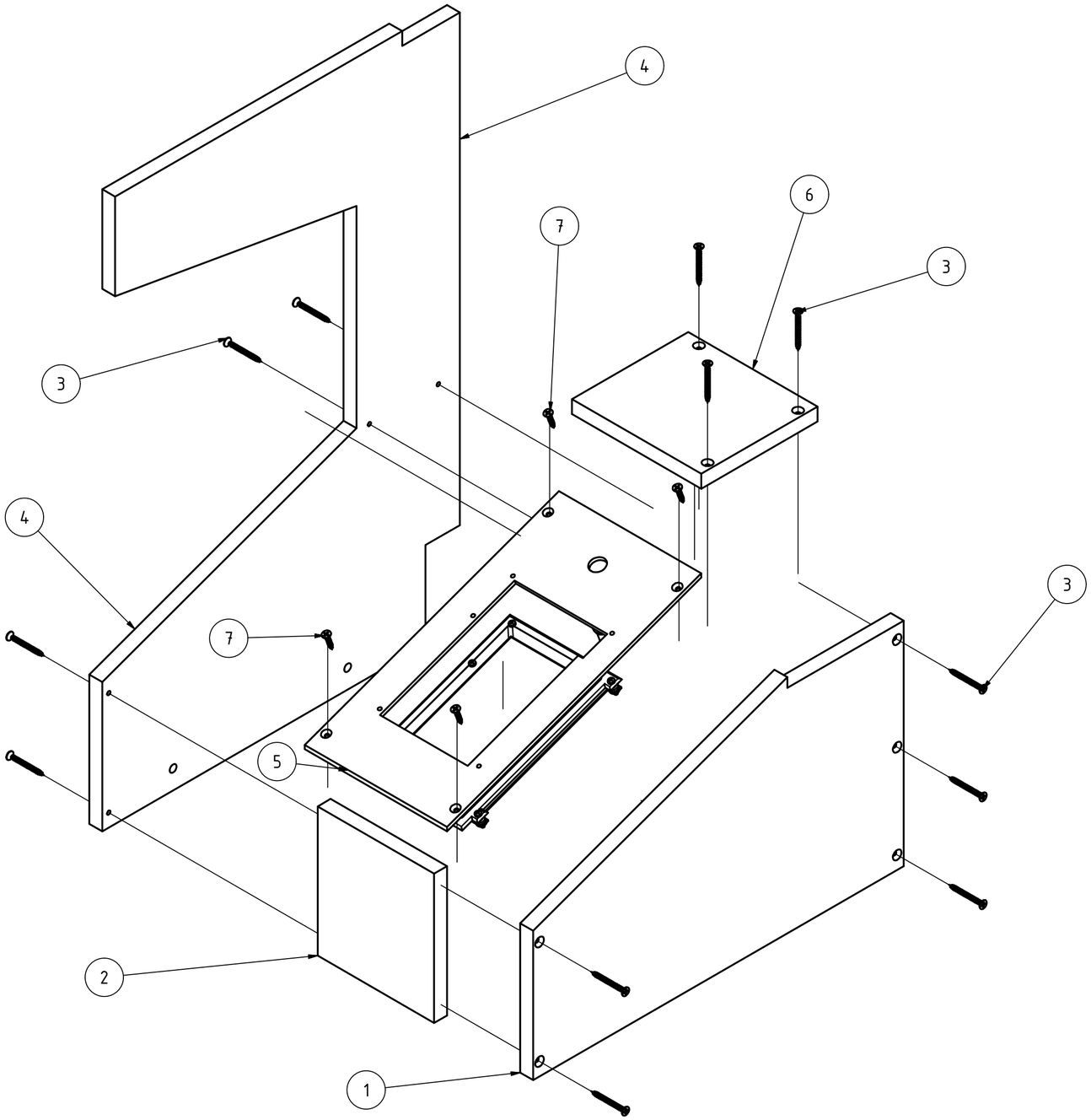

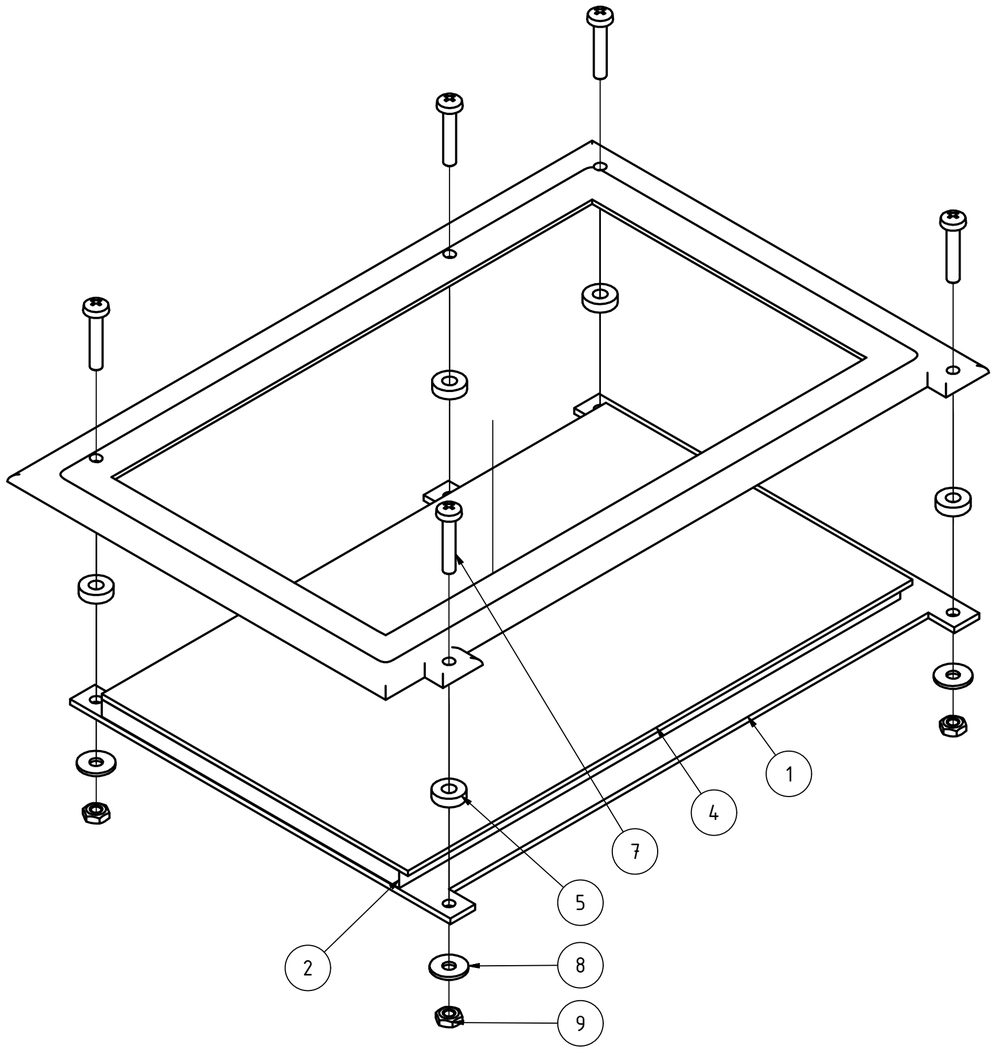

PARTS LIST			
ITEM	QTY	PART NUMBER	DESCRIPTION
1	1	RIGHT-OUTER-SIDE	15mm Plywood, 430x258mm
2	1	FRONT-LOWER-PLATE	15mm Plywood 150x135mm
3	12	Screws for wood 4x40	
4	1	LEFT-SIDEWALL	15mm Plywood 415x630mm
5	1	UI-PLATE	4mm Acryl 165x316mm
6	1	HORIZONTAL-TOP-PLATE	15mm Plywood 150x135mm
7	4	Screws for wood 4x20	
8	1	touchscreen	
10	1	PHOBYA POWER SWITCH 16 BLACK SOLID	STEP AP203

PARTS LIST			
ITEM	QTY	PART NUMBER	DESCRIPTION
1	1	DISPLAY-PCB	
2	1	LCD-DISPLAY	
3	1	LCD-DISPLAYAREA	
4	1	touchglas	
5	5	DISTANCEPIECE-3DP-SLA	
6	1	DISPLAYFRAME-3DP	
7	5	DIN 7985 (Z) - M3x16-Z	Cross recessed raised cheese head screws - Type Z
8	5	DIN 9021 - 3,2	Washer
9	5	ISO 4032 - M3	Hexagon nuts, style 1 - Product grades A and B

	Date	Name
Drawn	21.03.2017	ijon
Checked		
Standard		

State | Changes | Date | Name

electronic-housing

2

A2