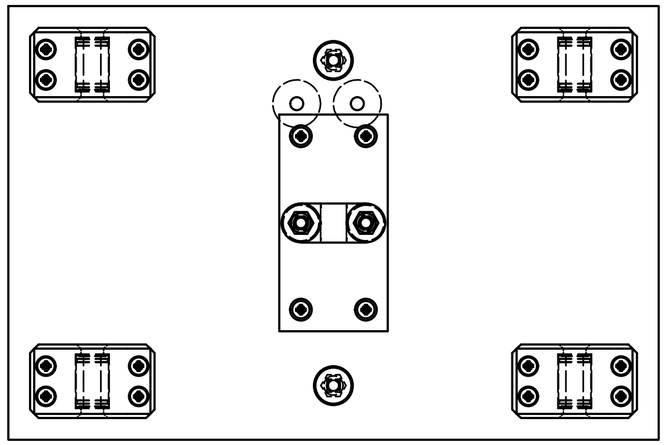

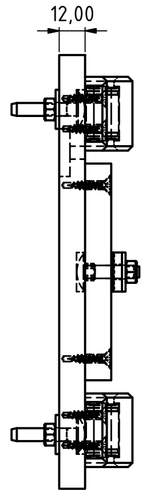

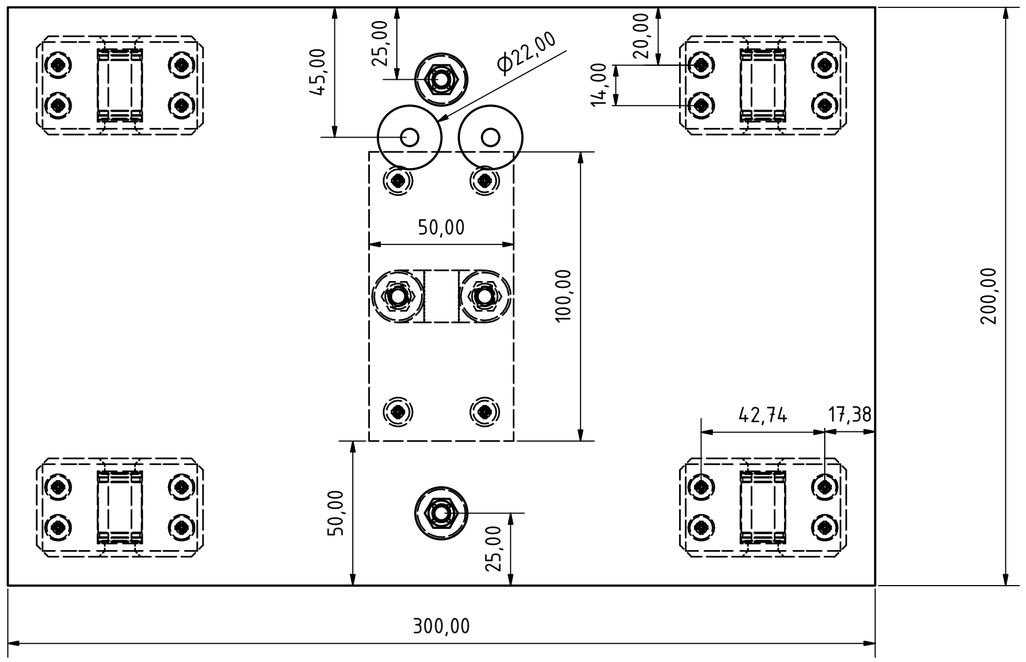

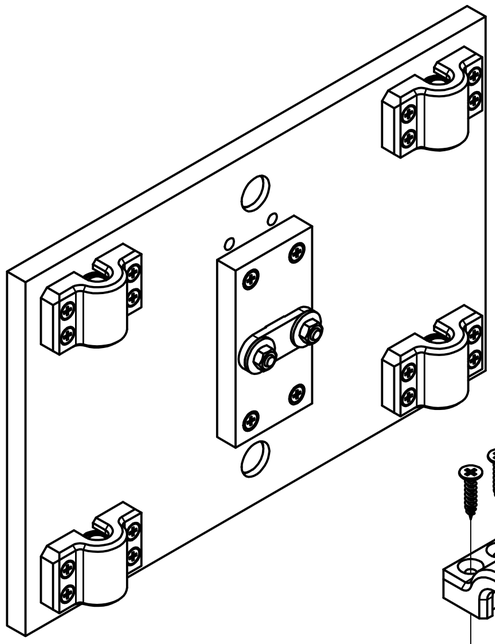

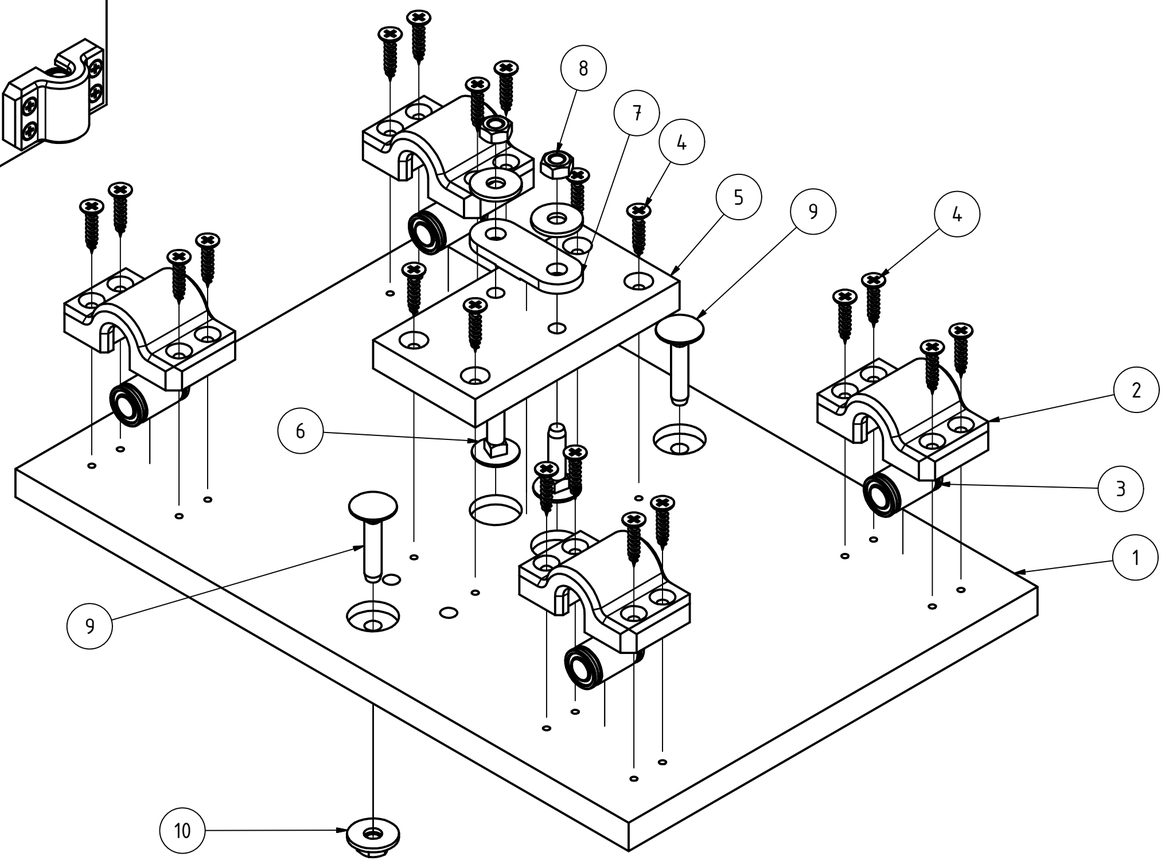

PARTS LIST

ITEM	QTY	PART NUMBER	DESCRIPTION
1	1	MOVING-BACKPLATE	12mm Plywood 300x200mm
2	4	LINEAR-BEARING-HOLDER-3DP	LQ-3DP, FDM, 0,3mm Layerheight
3	4	LM8UU 8mm Linear Bearing	
4	20	Screws for wood 4x20	
5	1	BELT-DISTANCE-PIECE	12mm Plywood 100x50mm
6	2	DIN 603 - M6 x 25	Cup Head Square Neck Bolt
7	1	BELT-LOCK-3DP	LQ-3DP, FDM, 0,2mm Layerheight
8	4	ISO 4032 - M6	Hex Nut
9	2	DIN 603 - M6 x 30	Cup Head Square Neck Bolt
10	4	DIN 9021 - 6,4	Washer

	Date	Name
Drawn	05.05.2018	ijon
Checked		
Standard		

State | Changes | Date | Name

connector-plate

1

A2