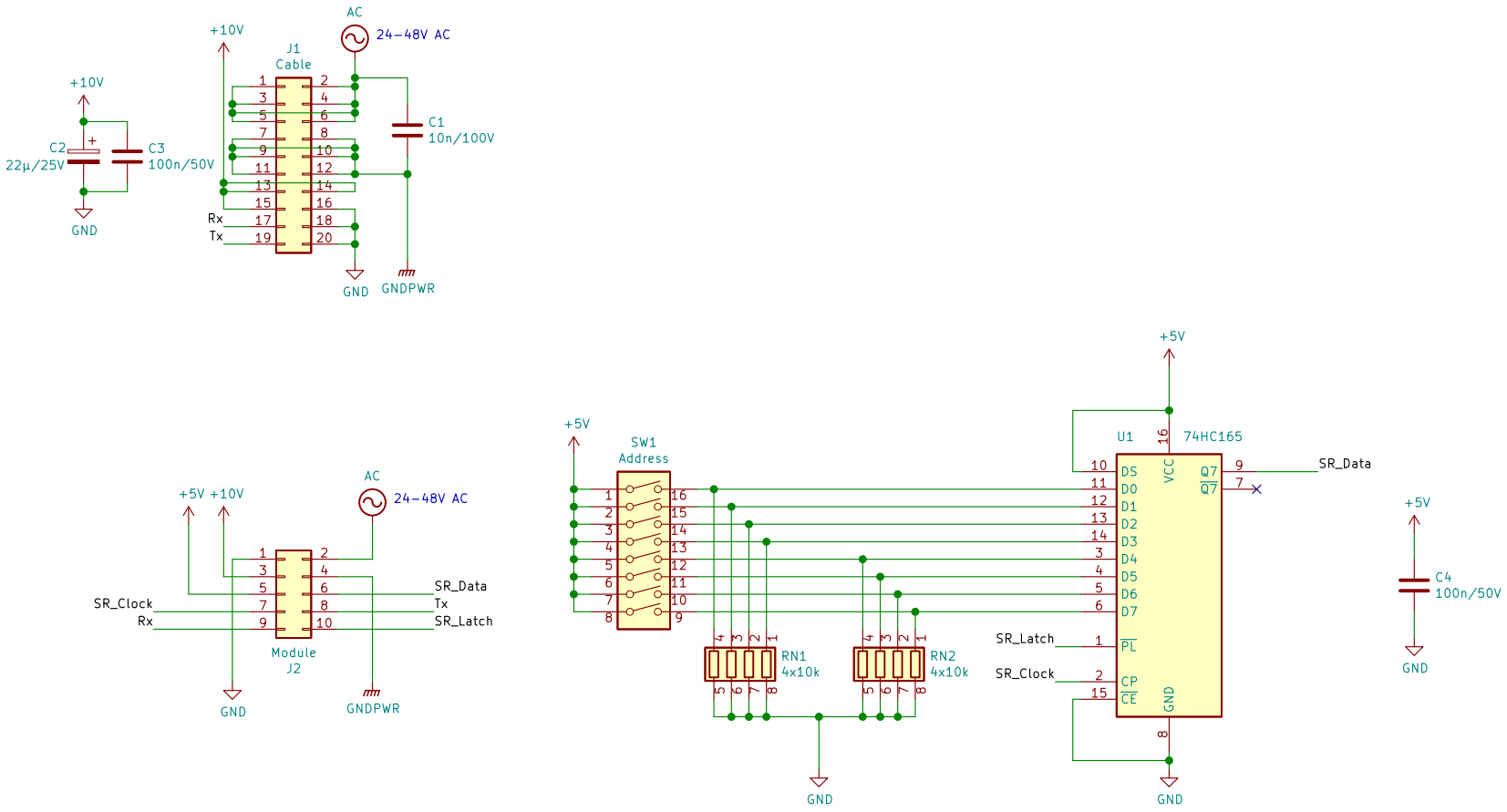

Sheet: /
File: MAN Adapterplatine.kicad_sch

Title: MAN Adapterplatine für KRONE Fallblattmodule

Size: A4	Date: 2021-12-04	**Rev: 1.1**
KiCad E.D.A. kicad (5.99.0-10628-ga06f965ffa)		Id: 1/1