CPU

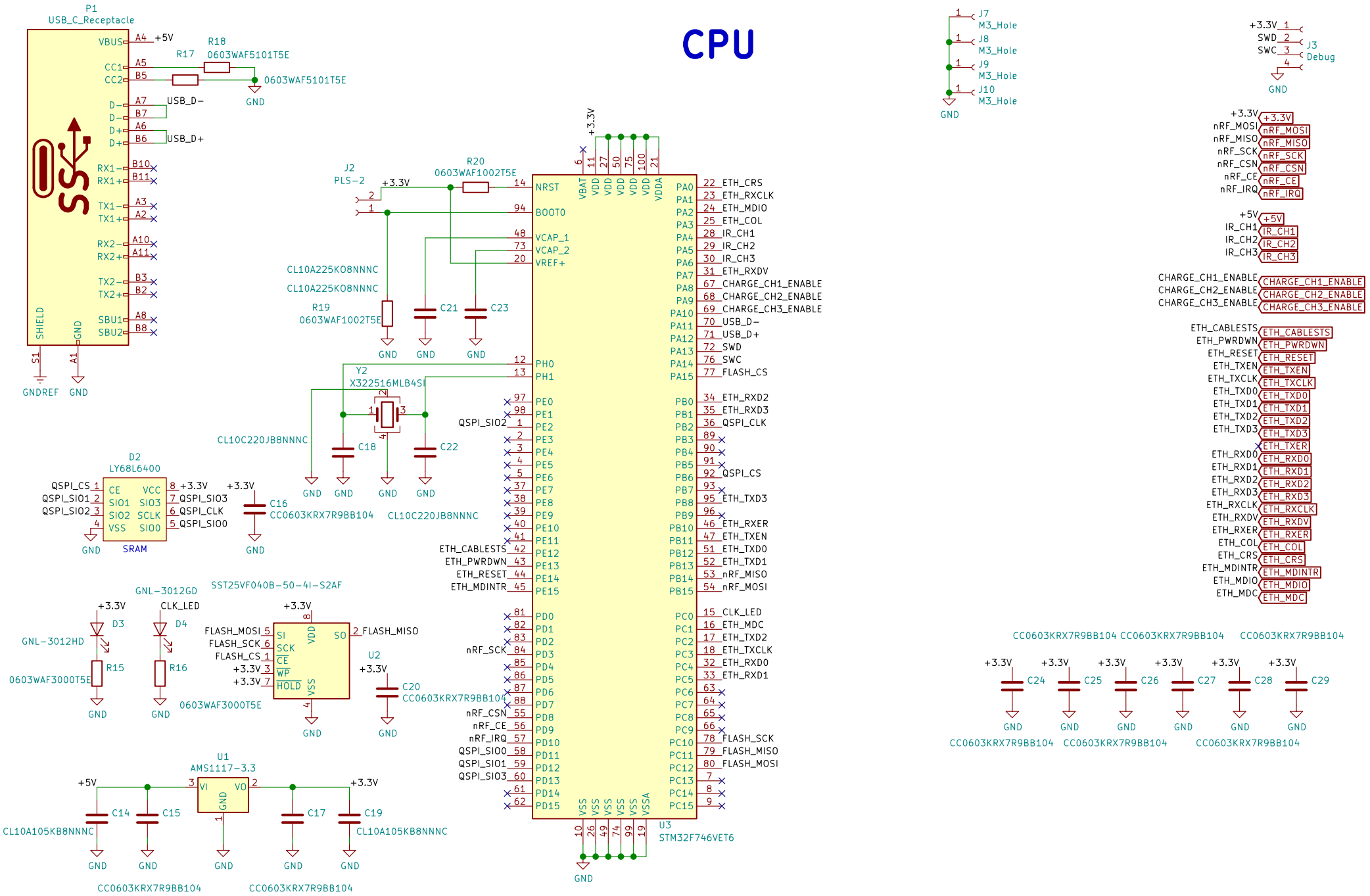
P1
USB_C_Receptacle
VBUS
CC1
CC2
D−
D+
RX1−
RX1+
TX1−
TX1+
RX2−
RX2+
TX2−
TX2+
SBU1
SBU2
SHIELD
GND
S1
A1
GNDREF
+5V
R17
R18
0603WAF5101T5E
USB_D−
USB_D+
J2
PLS−2
+3.3V
R20
0603WAF1002T5E
CL10A225KO8NNNC
R19
0603WAF1002T5E
C21
C23
Y2
X322516MLB4SI
CL10C220JB8NNNC
C18
C22
D2
LY68L6400
CE
SIO1
SIO2
VSS
VCC
SIO3
SCLK
SIO0
QSPI_CS
QSPI_SIO1
QSPI_SIO2
QSPI_SIO3
QSPI_CLK
SRAM
C16
CC0603KRX7R9BB104
GNL−3012GD
D3
D4
GNL−3012HD
CLK_LED
R15
R16
0603WAF3000T5E
SST25VF040B−50−4I−S2AF
SI
SCK
CE
WP
HOLD
VDD
SO
VSS
FLASH_MOSI
FLASH_SCK
FLASH_CS
FLASH_MISO
U2
C20
U1
AMS1117−3.3
VI
VO
C14
C15
C17
C19
CL10A105KB8NNNC
GND
NRST
BOOT0
VCAP_1
VCAP_2
VREF+
PH0
PH1
PE0
PE1
PE2
PE3
PE4
PE5
PE6
PE7
PE8
PE9
PE10
PE11
PE12
PE13
PE14
PE15
PD0
PD1
PD2
PD3
PD4
PD5
PD6
PD7
PD8
PD9
PD10
PD11
PD12
PD13
PD14
PD15
VBAT
VDD
VDDA
VSSA
PA0
PA1
PA2
PA3
PA4
PA5
PA6
PA7
PA8
PA9
PA10
PA11
PA12
PA13
PA14
PA15
PB0
PB1
PB2
PB3
PB4
PB5
PB6
PB7
PB8
PB9
PB10
PB11
PB12
PB13
PB14
PB15
PC0
PC1
PC2
PC3
PC4
PC5
PC6
PC7
PC8
PC9
PC10
PC11
PC12
PC13
PC14
PC15
ETH_CRS
ETH_RXCLK
ETH_MDIO
ETH_COL
IR_CH1
IR_CH2
IR_CH3
ETH_RXDV
CHARGE_CH1_ENABLE
CHARGE_CH2_ENABLE
CHARGE_CH3_ENABLE
USB_D−
USB_D+
SWD
SWC
FLASH_CS
ETH_RXD2
ETH_RXD3
QSPI_CLK
QSPI_CS
ETH_TXD3
ETH_TXER
ETH_TXD0
ETH_TXD1
nRF_MISO
nRF_MOSI
CLK_LED
ETH_MDC
ETH_TXD2
ETH_TXCLK
ETH_RXD0
ETH_RXD1
ETH_CABLESTS
ETH_PWRDWN
ETH_RESET
ETH_MDINTR
nRF_SCK
nRF_CSN
nRF_CE
nRF_IRQ
U3
STM32F746VET6
J7
M3_Hole
J8
J9
J10
J3
Debug
SWD
SWC
nRF_MOSI
nRF_MISO
nRF_SCK
nRF_CSN
nRF_CE
nRF_IRQ
IR_CH1
IR_CH2
IR_CH3
CHARGE_CH1_ENABLE
CHARGE_CH2_ENABLE
CHARGE_CH3_ENABLE
ETH_CABLESTS
ETH_PWRDWN
ETH_RESET
ETH_TXEN
ETH_TXCLK
ETH_TXD0
ETH_TXD1
ETH_TXD2
ETH_TXD3
ETH_TXER
ETH_RXD0
ETH_RXD1
ETH_RXD2
ETH_RXD3
ETH_RXCLK
ETH_RXDV
ETH_RXER
ETH_COL
ETH_CRS
ETH_MDINTR
ETH_MDIO
ETH_MDC
CC0603KRX7R9BB104
C24
C25
C26
C27
C28
C29