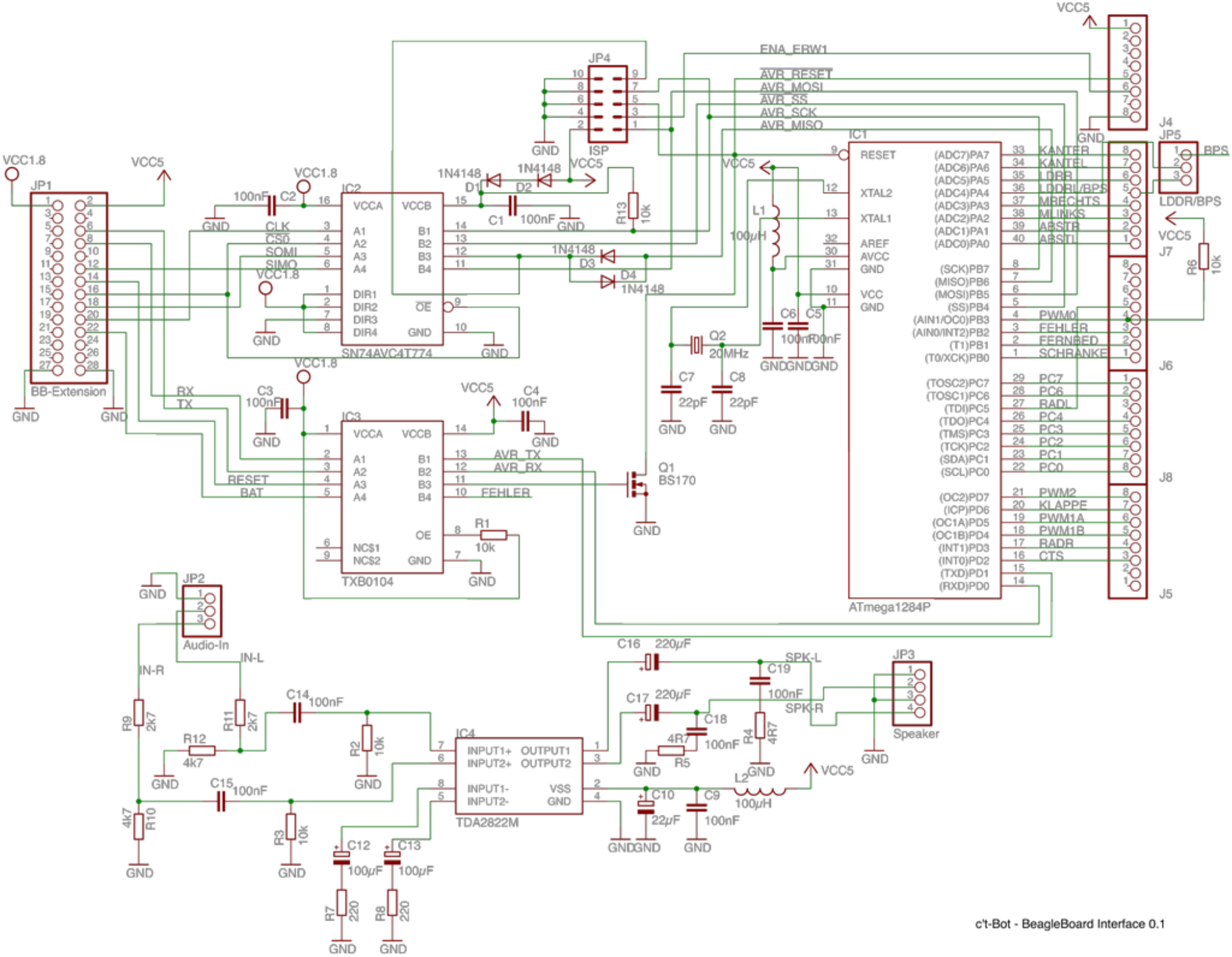
c't-Bot - BeagleBoard Interface 0.1
JP1
BB-Extension
IC2
SN74AVC4T774
IC3
TXB0104
IC1
ATmega1284P
JP4
ISP
JP5
LDDR/BPS
J4
J5
J6
J7
J8
JP2
Audio-In
JP3
Speaker
IC4
TDA2822M
Q1
BS170
Q2
20MHz
L1
100µH
L2
100µH
ENA_ERW1
AVR_RESET
AVR_MOSI
AVR_SS
AVR_SCK
AVR_MISO
AVR_TX
AVR_RX
FEHLER
RESET
BAT
RX
TX
CLK
CS0
SOMI
SIMO
SPK-L
SPK-R
IN-L
IN-R
VCC5
VCC1.8
GND