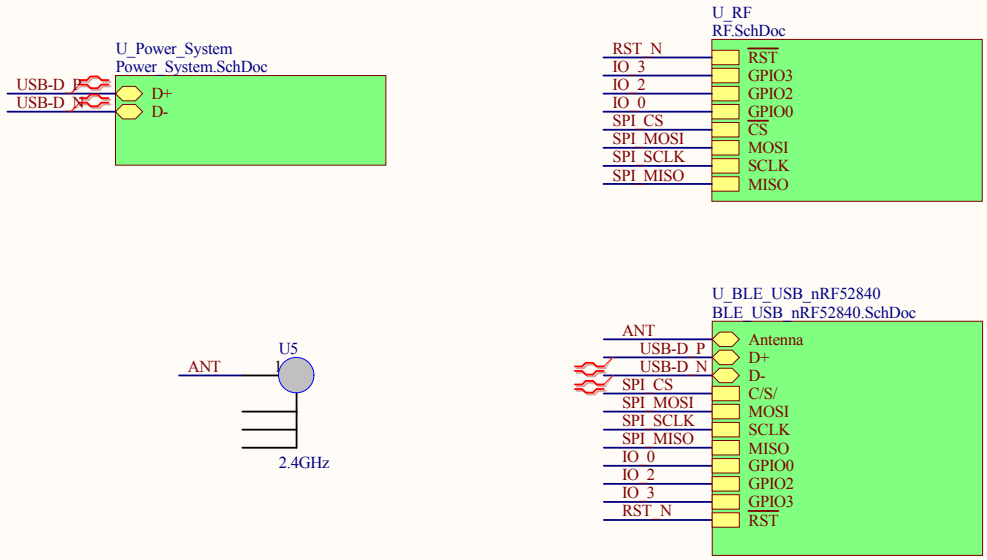

Title *sitara*		
Designed by: Goverdhan	Revision: 1	
Date: 7/7/2017 Time: 1:51:13 PM	Sheet 1 of 4	
File: _Block_level_sheet.SchDoc		

SPAN
University of Utah
50 S Central Campus Dr
MEB Rm 3129
Salt Lake City, Utah 84115
USA

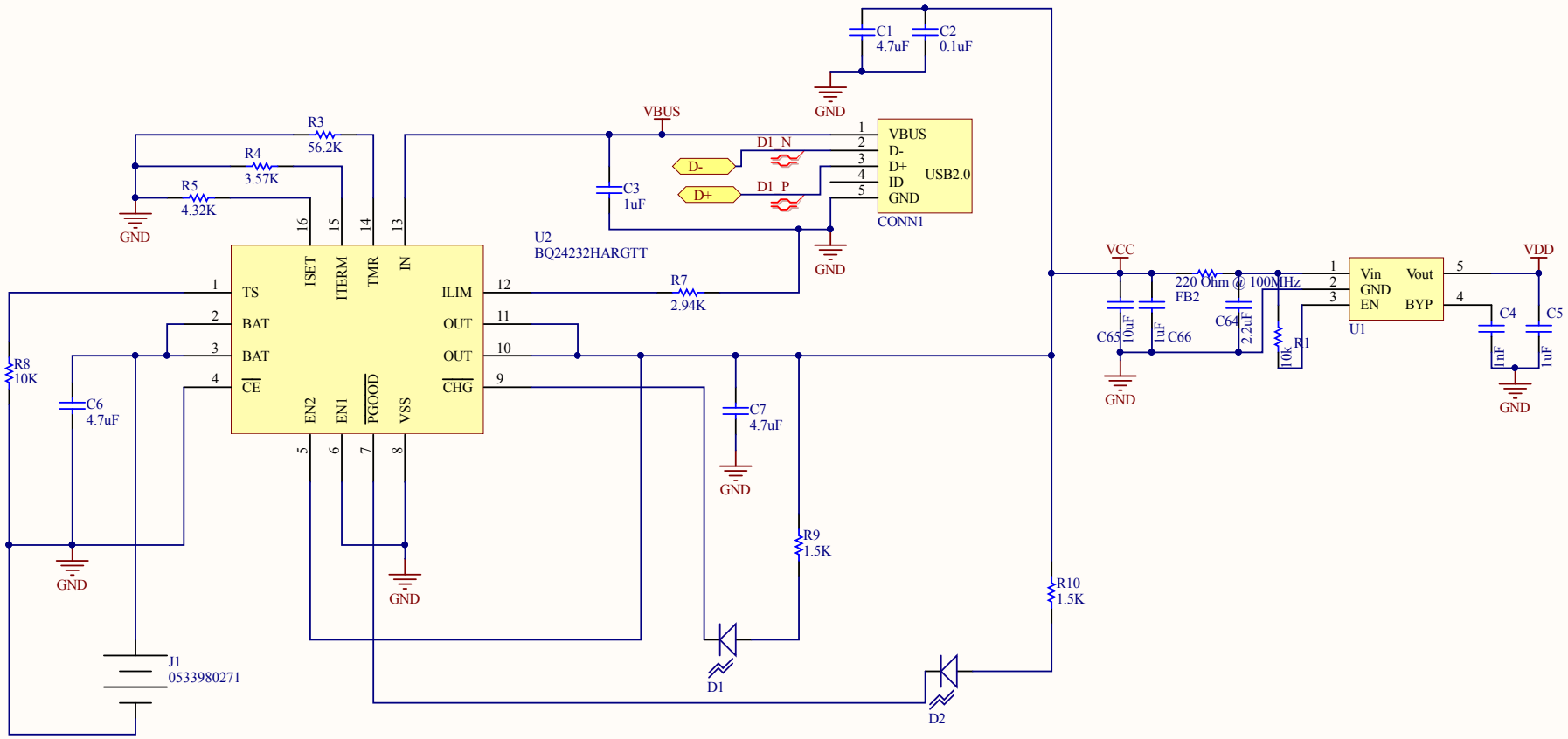

Title *sitara*		*SPAN* *University of Utah* *50 S Central Campus Dr* *MEB Rm 3129* *Salt Lake City, Utah 84115* *USA*
Designed by: Goverdhan	Revision: 1	
Date: 7/7/2017 Time: 1:51:14 PM	Sheet 2 of 4	
File: Power_System.SchDoc		

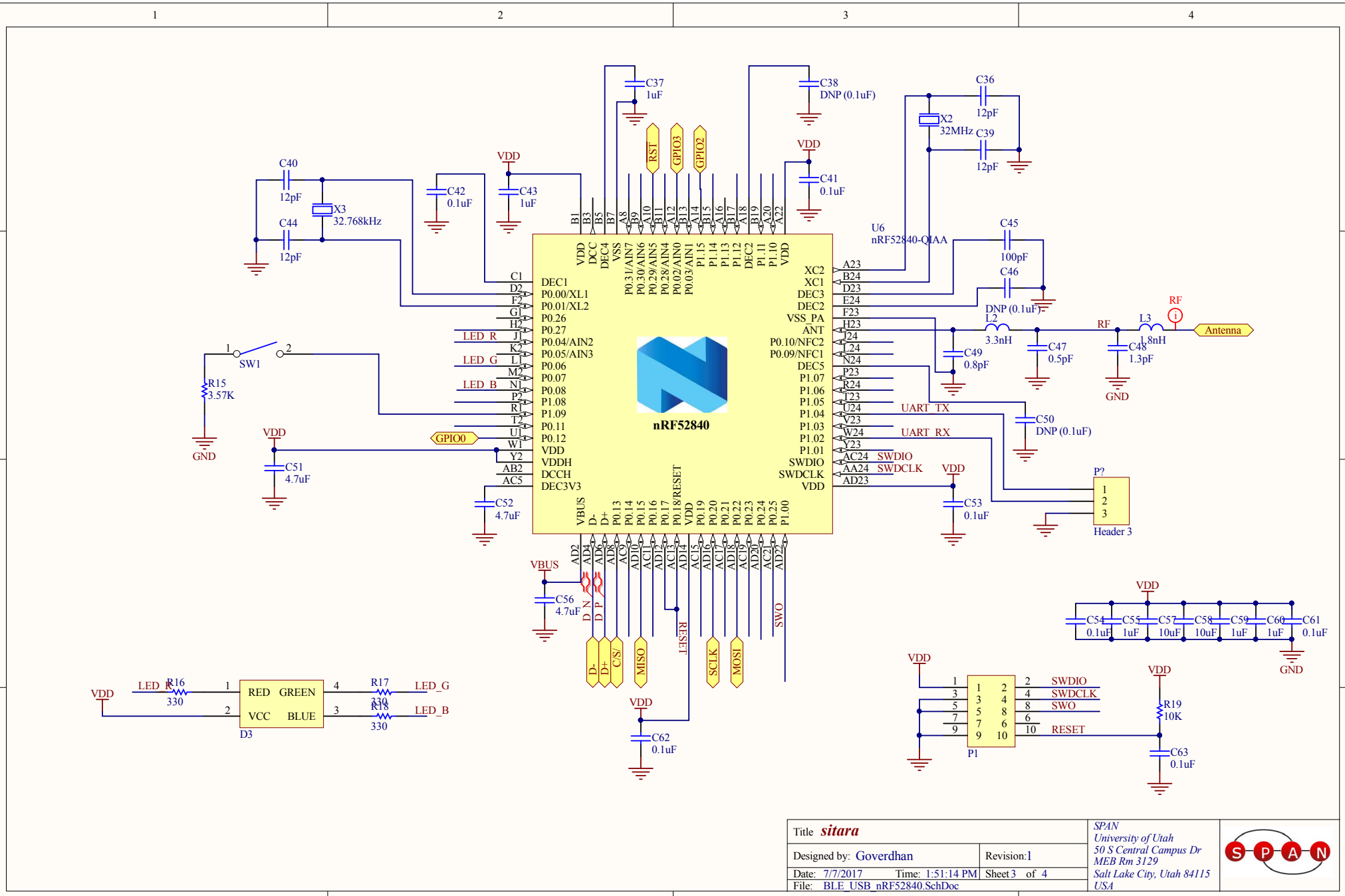

Title *sitara*		*SPAN* *University of Utah* *50 S Central Campus Dr* *MEB Rm 3129* *Salt Lake City, Utah 84115* *USA*
Designed by: Goverdhan	Revision: 1	
Date: 7/7/2017 Time: 1:51:14 PM	Sheet 3 of 4	
File: BLE_USB_nRF52840.SchDoc		

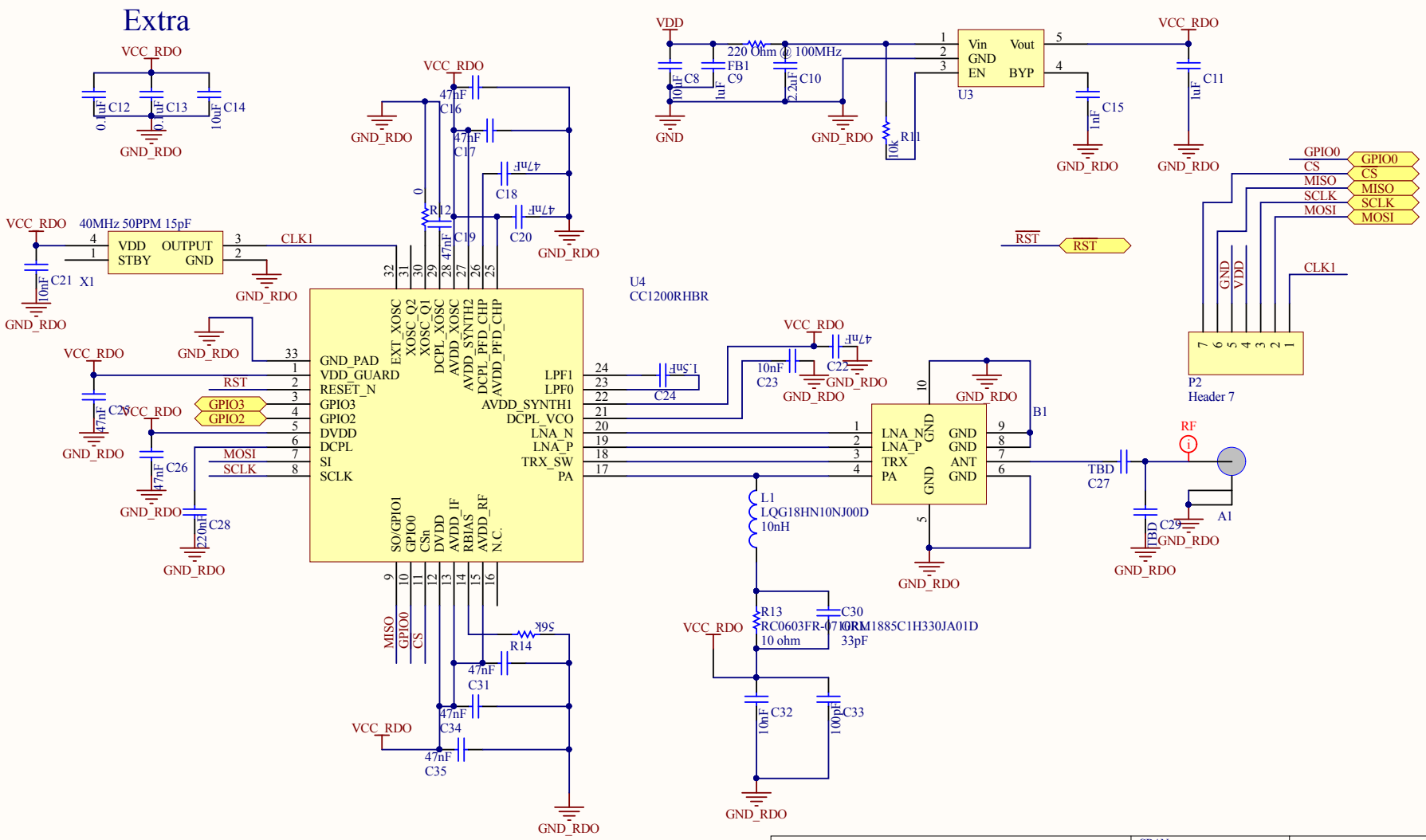
Extra
VCC_RDO
C12 0.1uF
C13 0.1uF
C14 10uF
GND_RDO
VDD
C8 10uF
C9 1uF
FB1 220 Ohm @ 100MHz
C10 2.2uF
R11 10k
U3
Vin
GND
EN
Vout
BYP
C15 1nF
C11 1uF
C16 47nF
C17 47nF
C18 47nF
C19 47nF
C20 47nF
R12 0
40MHz 50PPM 15pF
VDD
STBY
OUTPUT
GND
CLK1
X1
C21 10nF
U4
CC1200RHBR
GND_PAD
VDD_GUARD
RESET_N
GPIO3
GPIO2
DVDD
DCPL
SI
SCLK
EXT_XOSC
XOSC_Q2
XOSC_Q1
DCPL_XOSC
AVDD_XOSC
AVDD_SYNTH2
DCPL_PFD_CHP
AVDD_PFD_CHP
LPF1
LPF0
AVDD_SYNTH1
DCPL_VCO
LNA_N
LNA_P
TRX_SW
PA
SO/GPIO1
GPIO0
CSn
DVDD
AVDD_IF
RBIAS
AVDD_RF
N.C.
RST
GPIO3
GPIO2
MOSI
SCLK
C25 47nF
C26 47nF
C28 220nF
MISO
GPIO0
CS
R14 56k
C31 47nF
C34 47nF
C35 47nF
C24 1.5nF
C22 47nF
C23 10nF
B1
LNA_N
LNA_P
TRX
PA
GND
GND
GND
GND
ANT
GND
L1
LQG18HN10NJ00D
10nH
R13
RC0603FR-07 10 ohm
C30
GRM1885C1H330JA01D
33pF
C32 10nF
C33 100pF
TBD
C27
C29 TBD
RF
A1
GPIO0
CS
MISO
SCLK
MOSI
GND
VDD
CLK1
P2
Header 7
Title sitara
Designed by: Goverdhan
Revision: 1
Date: 7/7/2017
Time: 1:51:14 PM
Sheet 4 of 4
File: RF.SchDoc
SPAN
University of Utah
50 S Central Campus Dr
MEB Rm 3129
Salt Lake City, Utah 84115
USA

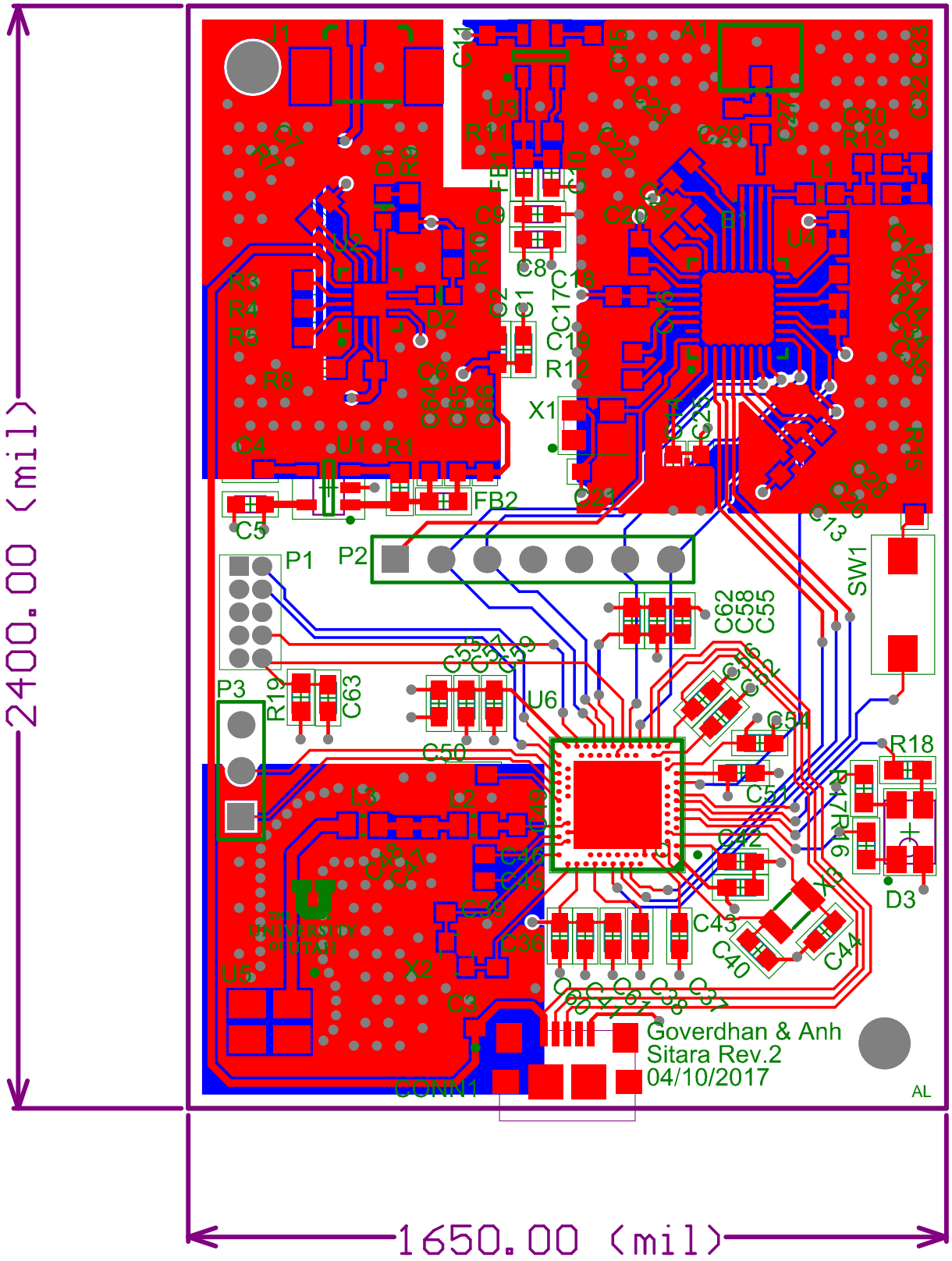
2400.00 (mil)
1650.00 (mil)
Goverdhan & Anh
Sitara Rev.2
04/10/2017
AL
THE UNIVERSITY OF UTAH
J1
A1
U3
U4
U1
U2
U5
U6
X1
X2
P1
P2
P3
SW1
CONN1
L1
L2
L3
D1
D2
D3
FB1
FB2
R1
R3
R4
R5
R8
R9
R10
R11
R12
R13
R15
R16
R17
R18
R19
C1
C2
C3
C4
C5
C6
C8
C9
C11
C13
C17
C18
C19
C20
C21
C27
C29
C30
C32
C33
C36
C40
C42
C43
C44
C50
C51
C54
C55
C58
C62
C63