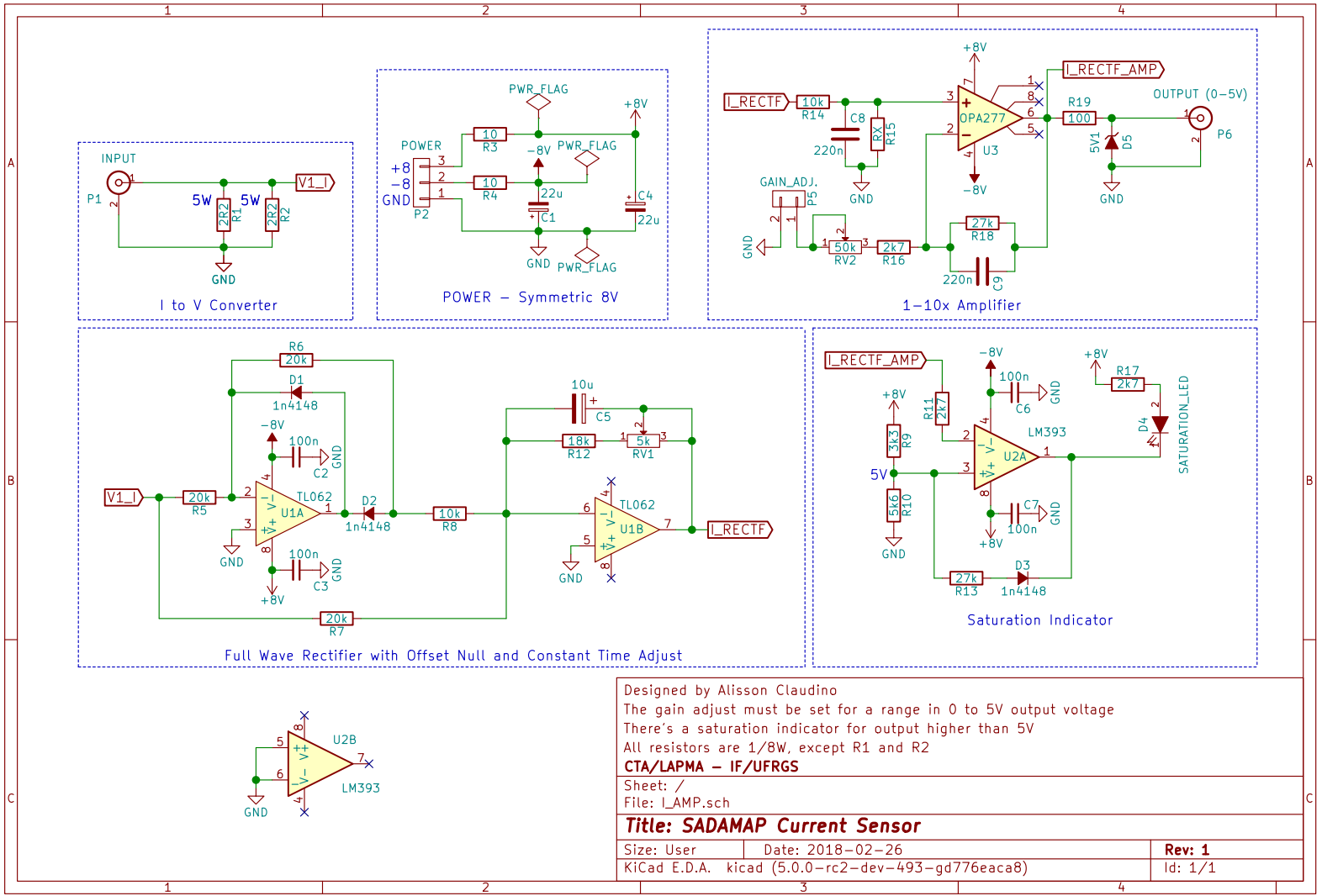

Designed by Alisson Claudino
The gain adjust must be set for a range in 0 to 5V output voltage
There's a saturation indicator for output higher than 5V
All resistors are 1/8W, except R1 and R2

CTA/LAPMA – IF/UFRGS

Sheet: /
File: I_AMP.sch

Title: SADAMAP Current Sensor

Size: User	Date: 2018-02-26	**Rev: 1**
KiCad E.D.A. kicad (5.0.0-rc2-dev-493-gd776eaca8)		Id: 1/1