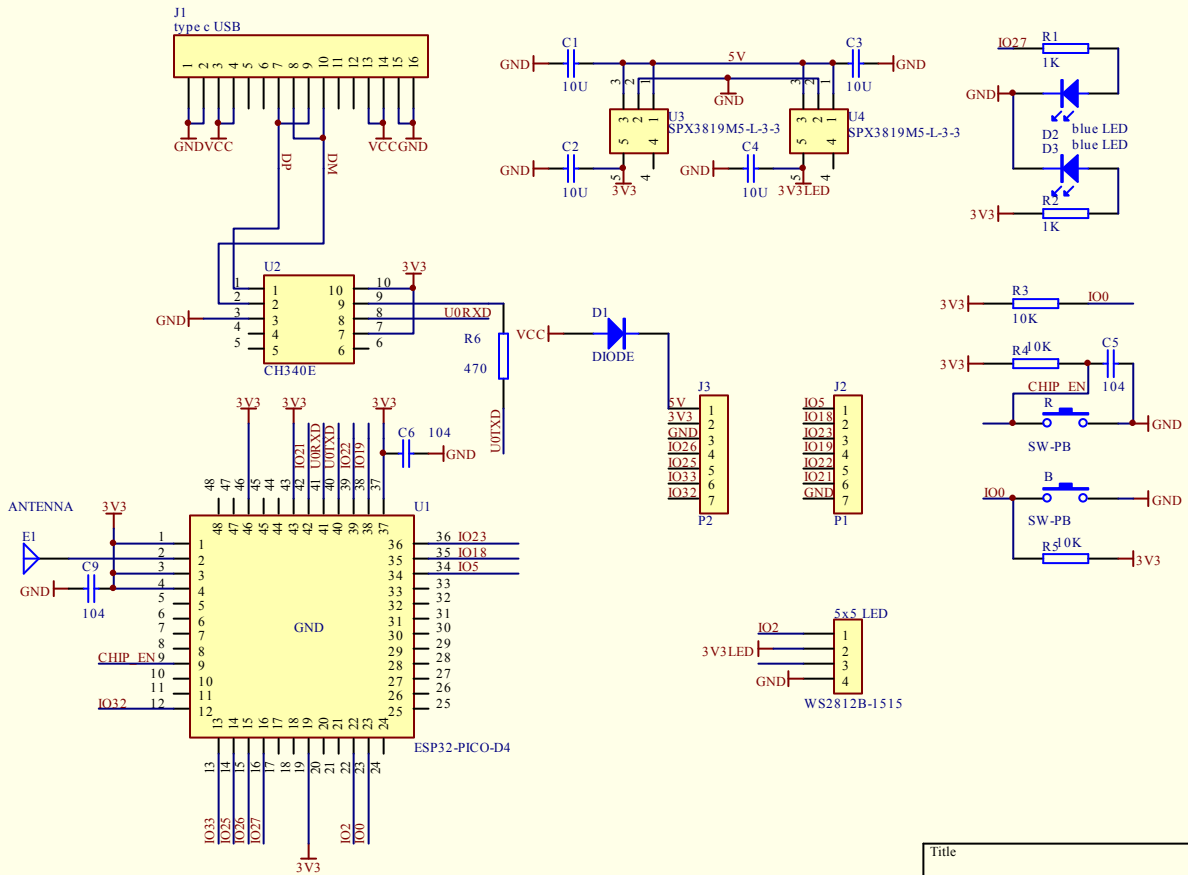

Title		
Size A4	Number	Revision
Date: 9-Apr-2022	Sheet of	
File: C:\Users\Administrator\Desktop\新建文件夹\Hardware boot selection switch.DDB	Drawn By:	