REV.	DESCRIPTION	DATE
A	NEW DRAWING	11/17/2005
B	updated contact resistance	6/6/2006

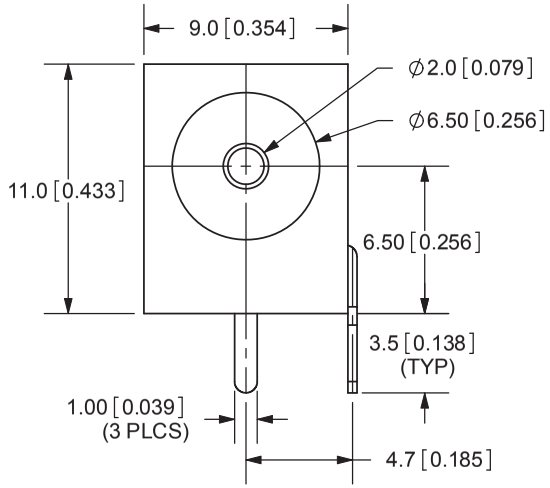

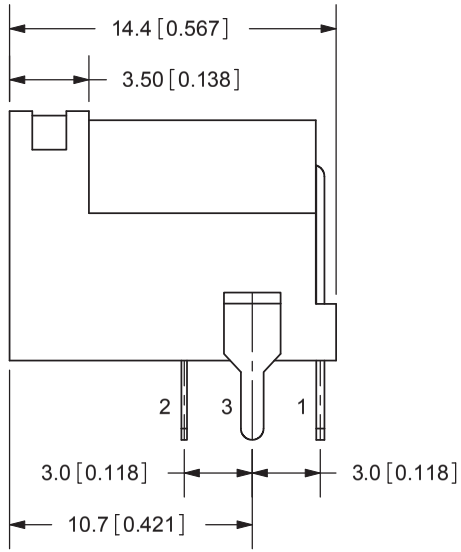

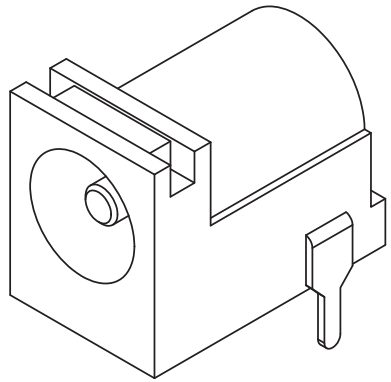

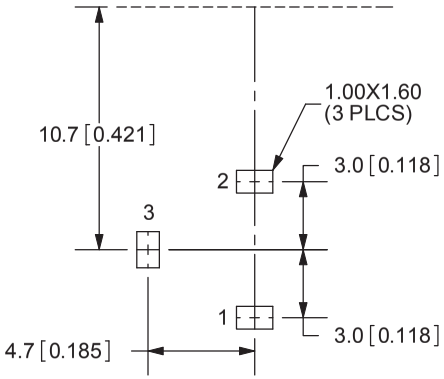

PCB LAYOUT
TOP VIEW

TOLERANCE:
X.X ±0.2mm
X.XX ±0.1mm
X.XXX ±0.05mm

RoHS

SPECIFICATIONS:
RATING: 16V DC @ 2.5A
CONTACT RESISTANCE: 30m OHMS MAX
INSULATION RESISTANCE: 50M OHMS MIN: 100V DC
VOLTAGE WITHSTAND: 500V AC R.M.S. FOR 1 MINUTE
LIFE: 5,000 CYCLES
OPERATING TEMP: -25° ~ +85°C

MODEL NO.	PJ-102A
SCHEMATIC	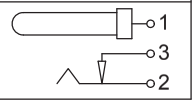

CENTER PIN DIAMETER 2.0mm Dia.

	MATERIAL	PLATING
CENTER PIN	Copper	Nickel
TERMINAL 1	Brass	Tin
TERMINAL 2	Copper Alloy	Tin
TERMINAL 3	Brass	Tin
HOUSING	PBT	

CUI INC
20050 SW 112th Ave.
Tualatin, OR 97062
Phone: 503-612-2300
800-275-4899
Fax: 503-612-2383
Website: www.cui.com

TITLE: DC POWER JACK
REV: B
PART NO. PJ-102A
UNITS: MM [INCHES]
DRAWN BY: ZRJ
APPROVED BY:
SCALE: 3:1

PC FILE NAME: PJ-102A

COPYRIGHT 2008 BY CUI INC.