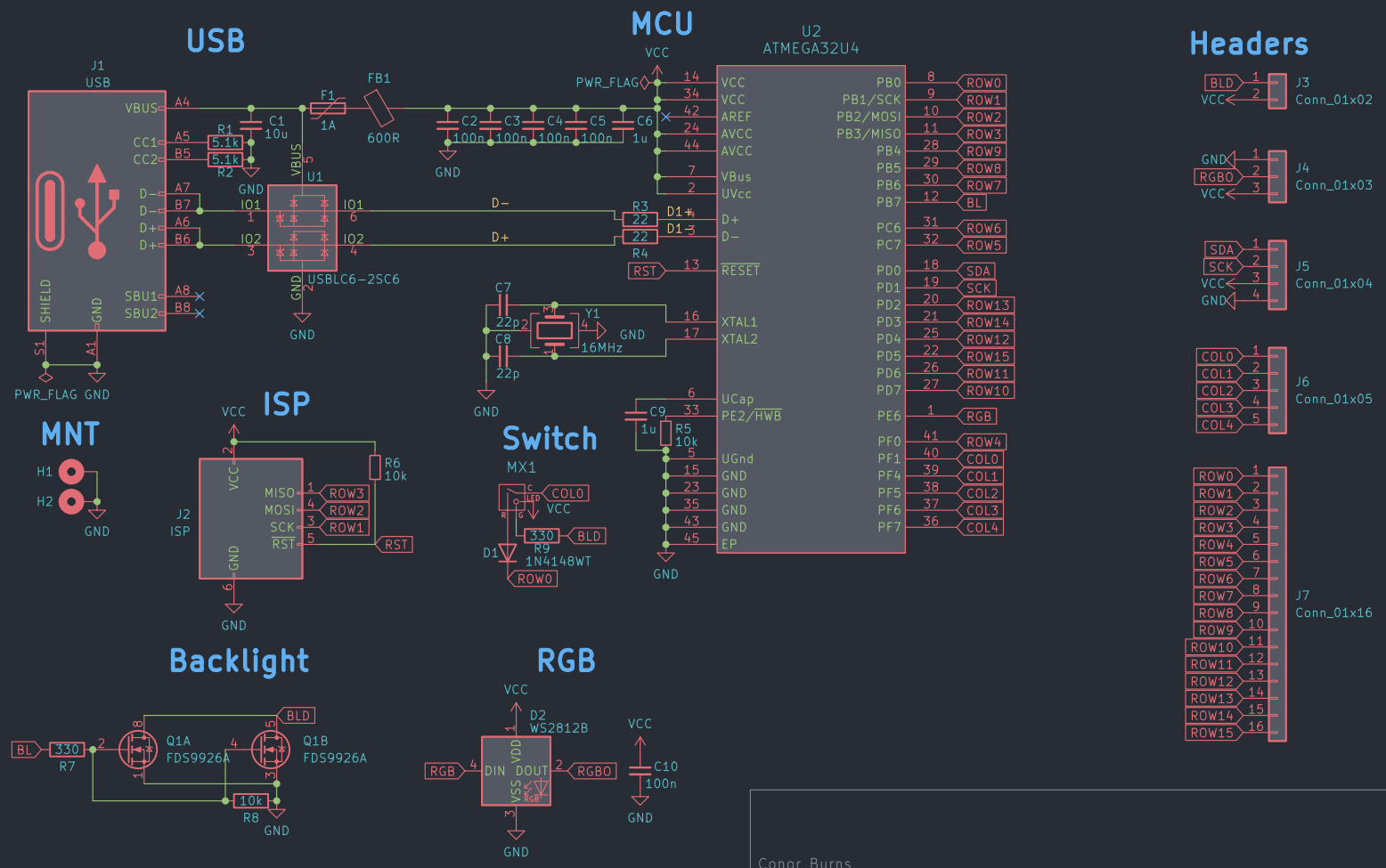

Conor Burns
0xCB
Sheet: /
File: micro.kicad_sch

Title: micro

Size: A4	Date: 2021−06−26	**Rev: 1.0**
KiCad E.D.A. kicad 6.0.0		Id: 1/1