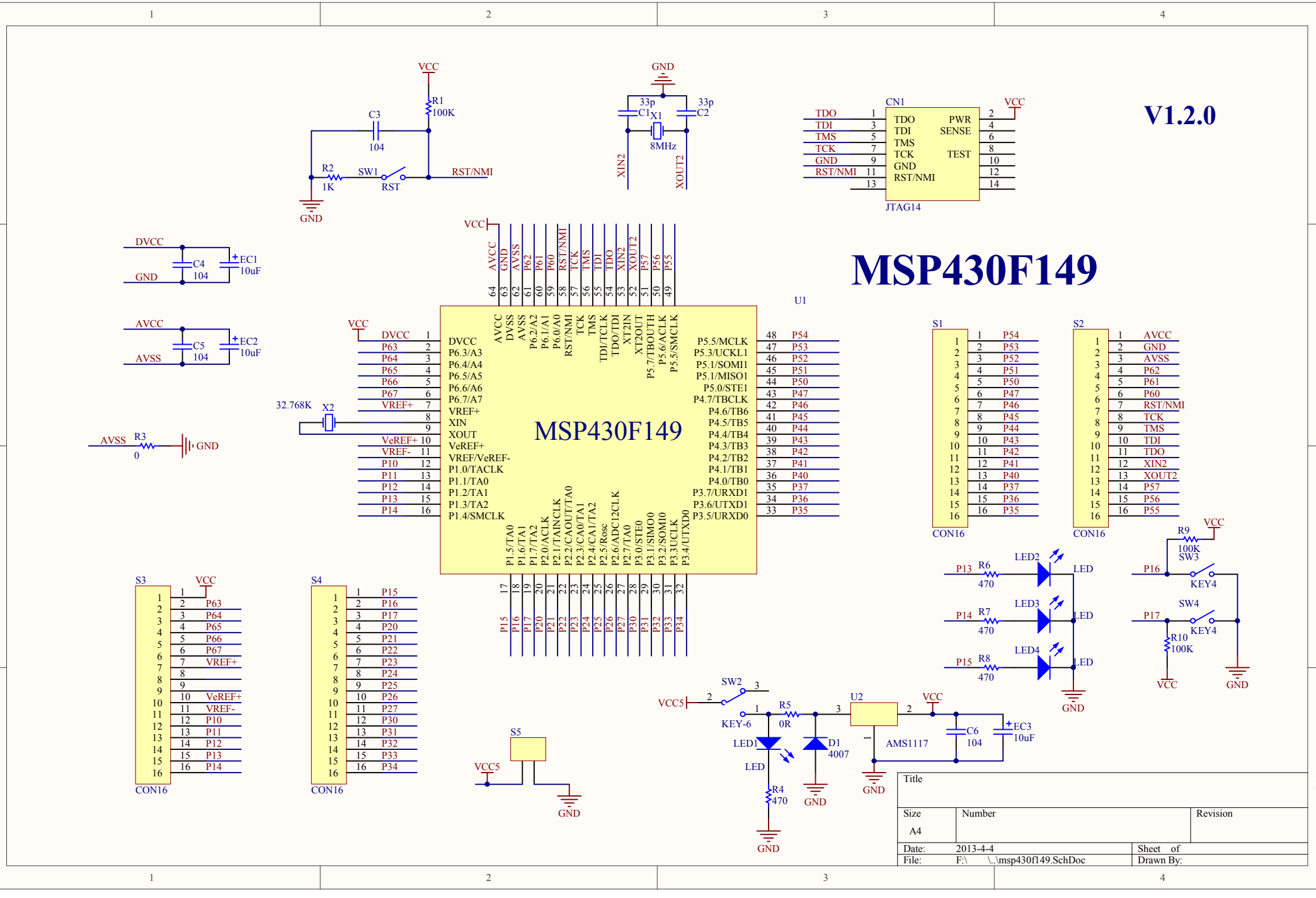
V1.2.0
MSP430F149
MSP430F149
U1
CN1
JTAG14
TDO
TDI
TMS
TCK
GND
RST/NMI
PWR
SENSE
TEST
VCC
R1
100K
C3
104
R2
1K
SW1
RST
RST/NMI
GND
33p
C1
X1
8MHz
33p
C2
XIN2
XOUT2
DVCC
C4
104
EC1
10uF
GND
AVCC
C5
104
EC2
10uF
AVSS
32.768K
X2
AVSS
R3
0
GND
S1
CON16
S2
CON16
S3
CON16
S4
CON16
S5
VCC5
R9
100K
SW3
KEY4
SW4
KEY4
R10
100K
P13
R6
470
LED2
LED
P14
R7
470
LED3
LED
P15
R8
470
LED4
LED
SW2
KEY-6
VCC5
R5
0R
LED1
LED
R4
470
D1
4007
U2
AMS1117
C6
104
EC3
10uF
Title
Size
A4
Number
Revision
Date: 2013-4-4
File: F:\ \..\msp430f149.SchDoc
Sheet of
Drawn By:

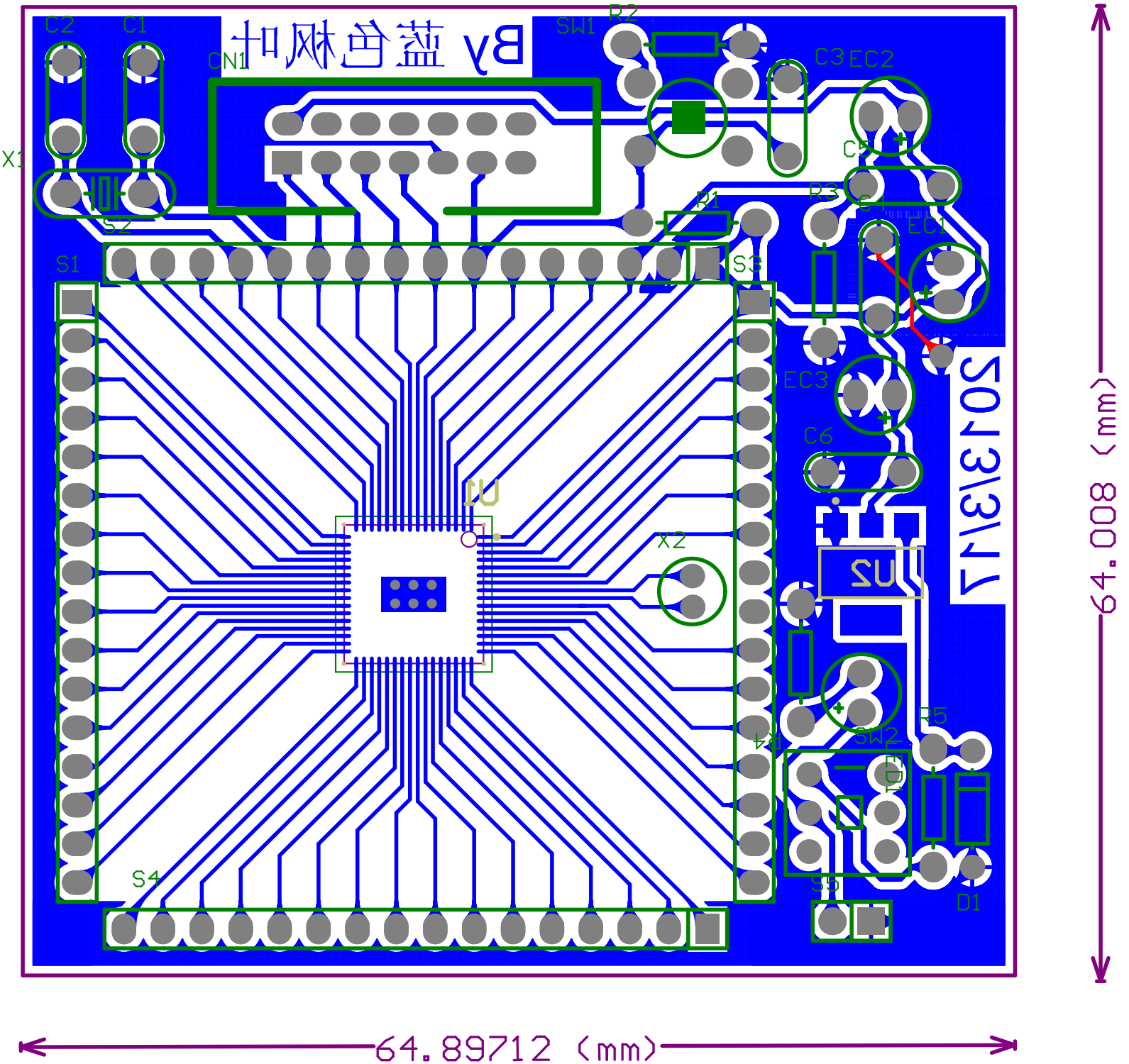
By 蓝色枫叶
2013/3/10
C2
C1
CN1
SW1
R2
C3
EC2
C5
X1
R3
R1
EC1
S2
S1
S3
EC3
C6
U1
X2
U2
R5
SW2
X4
S4
S5
D1
64.008 (mm)
64.89712 (mm)

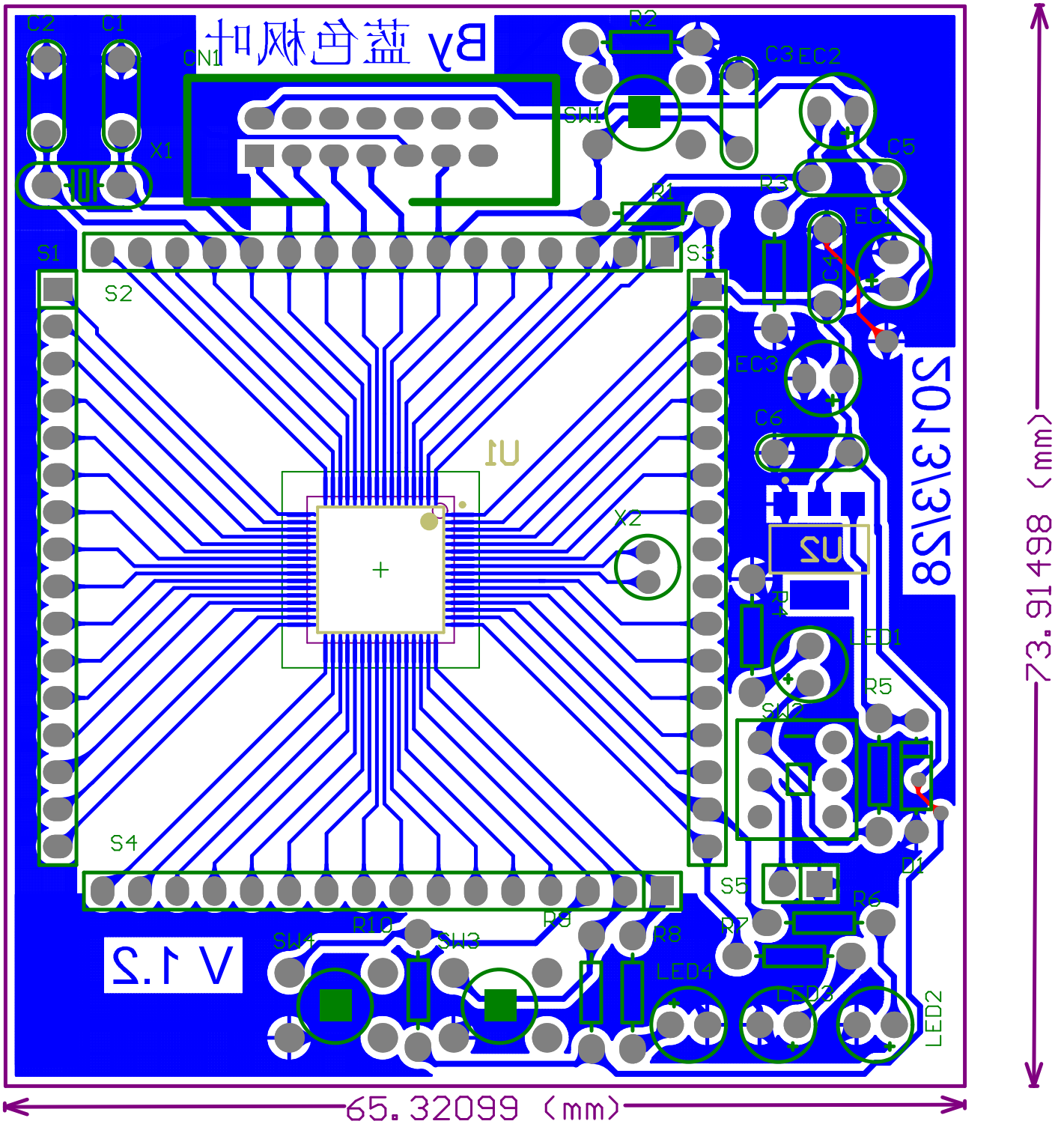
By 蓝色枫叶
2013\3\28
V 1.2
C2
C1
CN1
X1
R2
C3
EC2
SW1
C5
R3
R1
EC1
S1
S3
S2
C4
EC3
C6
U1
X2
U2
R4
LED1
R5
SW2
S4
D1
S5
R6
R10
R9
R8
R7
SW4
SW3
LED4
LED3
LED2
73.91498 (mm)
65.32099 (mm)