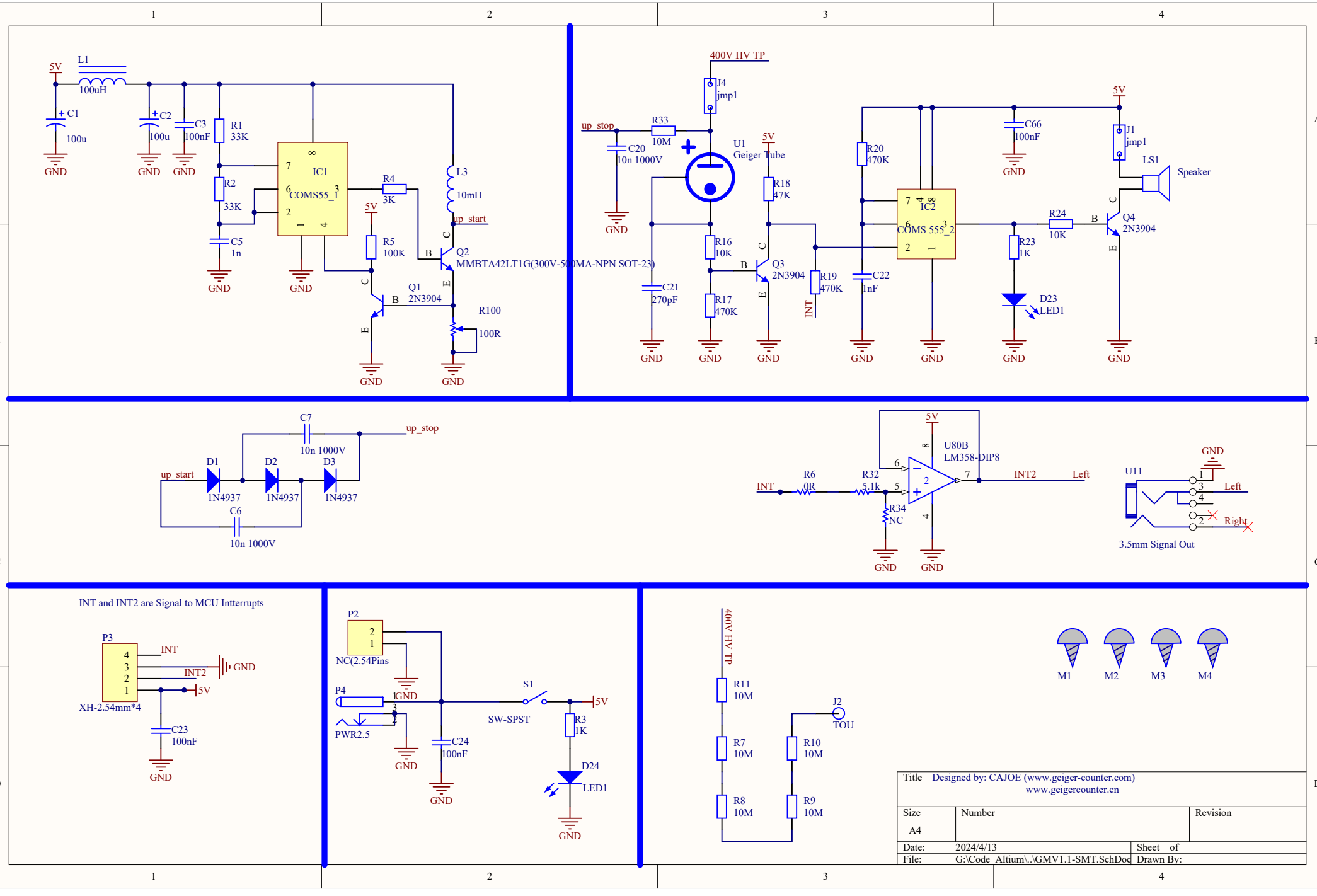
5V
L1
100uH
C1
100u
C2
100u
C3
100nF
R1
33K
R2
33K
C5
1n
IC1
COMS55_1
R4
3K
R5
100K
Q1
2N3904
L3
10mH
up_start
Q2
MMBTA42LT1G(300V-500MA-NPN SOT-23)
R100
100R
GND
400V HV TP
J4
jmp1
up_stop
R33
10M
C20
10n 1000V
U1
Geiger Tube
R16
10K
R17
470K
C21
270pF
R18
47K
Q3
2N3904
R19
470K
INT
R20
470K
C22
1nF
IC2
COMS 555_2
C66
100nF
R23
1K
D23
LED1
R24
10K
Q4
2N3904
J1
jmp1
LS1
Speaker
C7
10n 1000V
D1
1N4937
D2
1N4937
D3
1N4937
C6
10n 1000V
U80B
LM358-DIP8
R6
0R
R32
5.1k
R34
NC
INT2
Left
U11
Right
3.5mm Signal Out
INT and INT2 are Signal to MCU Intterrupts
P3
XH-2.54mm*4
C23
100nF
P2
NC(2.54Pins
P4
PWR2.5
C24
100nF
S1
SW-SPST
R3
1K
D24
LED1
400V HV TP
R11
10M
R7
10M
R8
10M
R10
10M
R9
10M
J2
TOU
M1
M2
M3
M4
Title Designed by: CAJOE (www.geiger-counter.com)
www.geigercounter.cn
Size A4
Number
Revision
Date: 2024/4/13
Sheet of
File: G:\Code_Altium\..\GMV1.1-SMT.SchDoc
Drawn By:

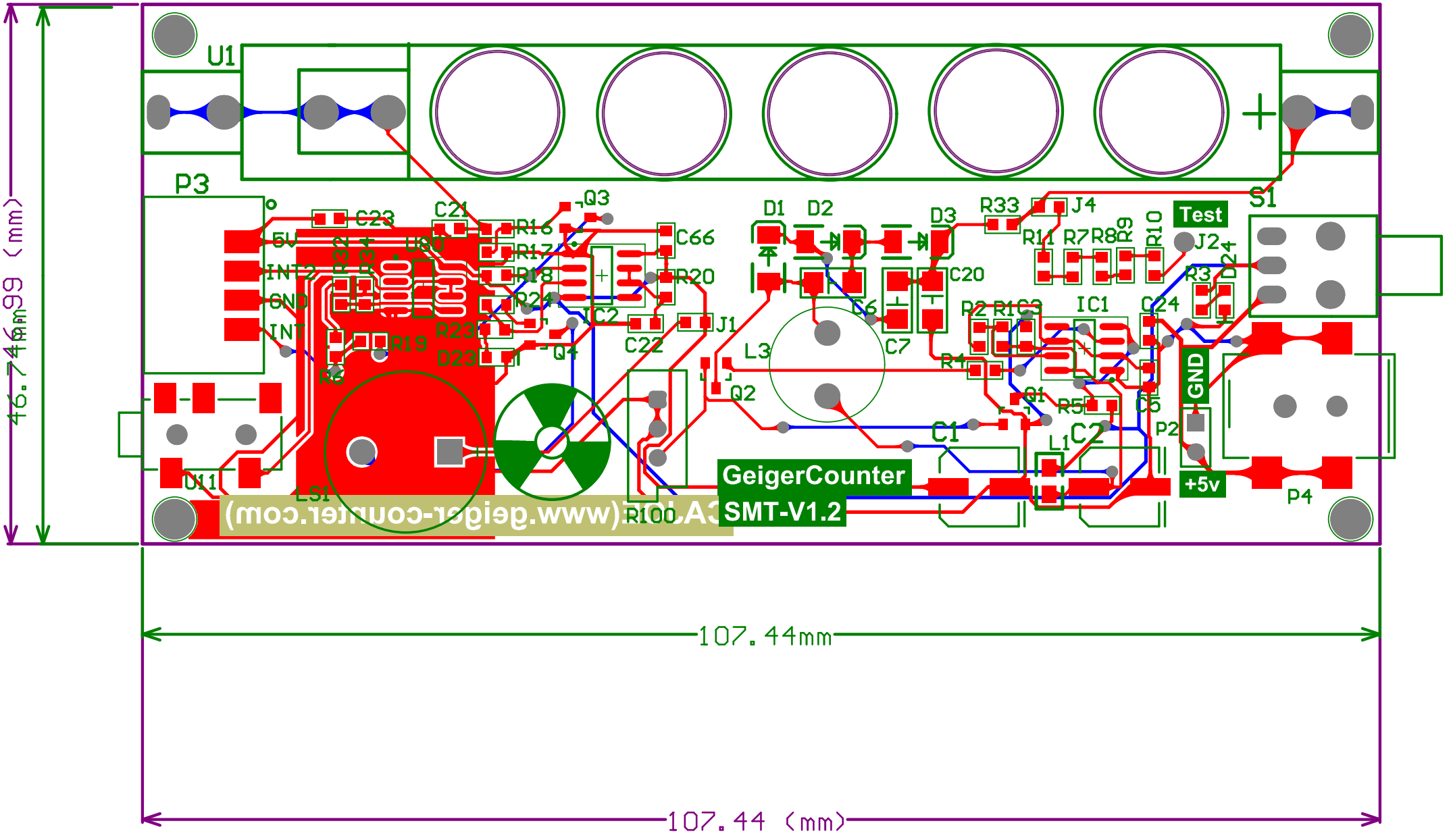
U1
P3
5V
INT2
GND
INT
C23
C21
U80
R16
R17
R18
R24
R23
D23
R19
R6
Q3
Q4
C66
R20
IC2
C22
J1
Q2
L3
D1
D2
D3
C6
C7
C20
R33
J4
R11
R7
R8
R9
R10
Test
J2
S1
R3
D24
R2
R1
C3
IC1
C24
R4
Q1
R5
C5
C1
C2
L1
P2
GND
+5v
P4
U11
LS1
R100
GeigerCounter
SMT-V1.2
(www.geiger-counter.com)
46.74mm
99 (mm)
107.44mm
107.44 (mm)