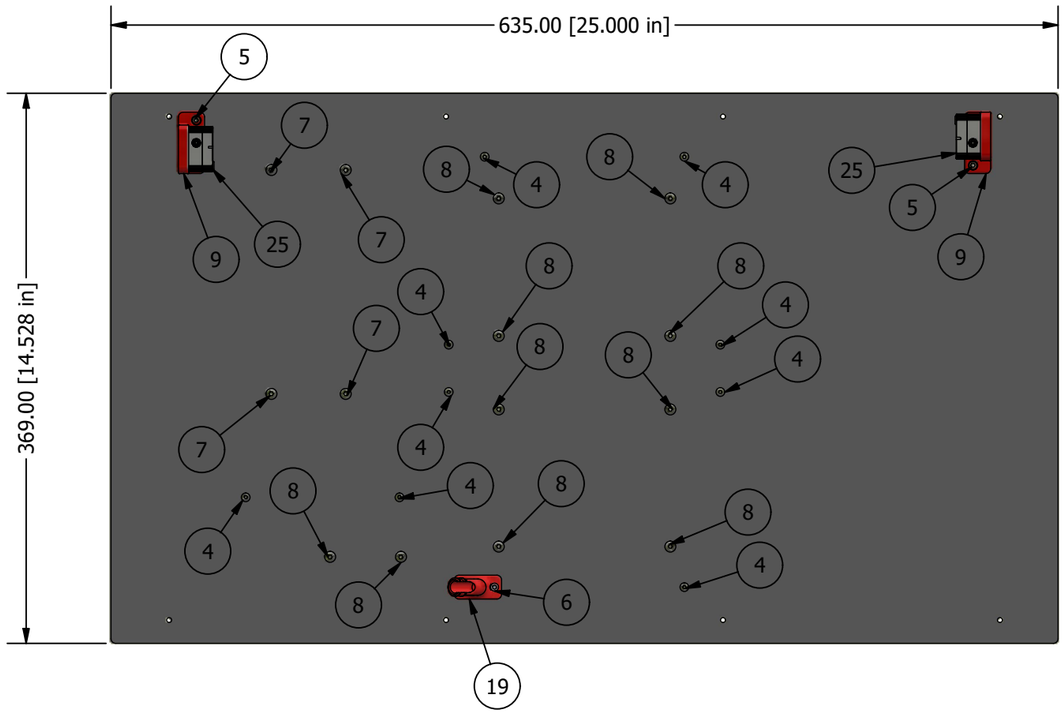


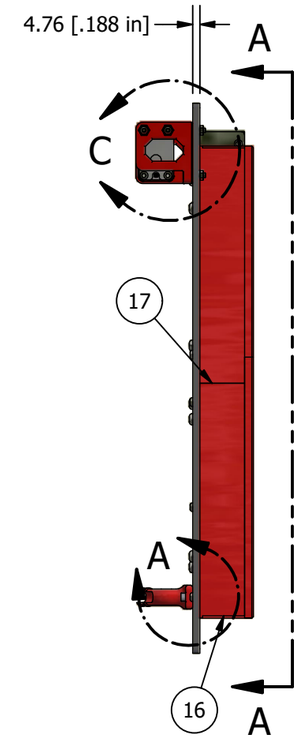


| Parts List | | | | |
|---|---|---|---|---|
| ITEM | QTY | PART NUMBER | DESCRIPTION | VENDOR |
| 1 | 4 | M3x0.5 x 20 | SHCS | |
| 2 | 11 | M4 x 0.7 | Hex Nut | |
| 3 | 19 | M3 x 0.5 | Hex Nut | |
| 4 | 9 | M3 x 0.5 x 10 | BHCS | |
| 5 | 4 | M3x0.5 x 12 | SHCS | |
| 6 | 2 | M3x0.5 x 16 | SHCS | |
| 7 | 4 | M4 x 0.7 x 8 | BHCS | |
| 8 | 10 | M4 x 0.7 x 12 | BHCS | |
| 9 | 2 | MULDEX-03-02 | SENSOR MOUNT | ATOMIC |
| 10 | 8 | MULDEX-03-04 | DUET SPACER | ATOMIC |
| 11 | 1 | MULDEX-03-05 | INLET GUIDE | ATOMIC |
| 12 | 1 | MULDEX-03-06 | CABLE COVER, STRAIGHT | ATOMIC |
| 13 | 2 | MULDEX-03-07 | CABLE COVER, VERT SHORT | ATOMIC |
| 14 | 2 | MULDEX-03-08 | CABLE COVER, HORZ | ATOMIC |
| 15 | 2 | MULDEX-03-09 | CABLE COVER, VERT LONG | ATOMIC |
| 16 | 1 | MULDEX-03-10 | CABLE DUCT, BOTTOM | ATOMIC |
| 17 | 1 | MULDEX-03-11 | CABLE DUCT, TOP | ATOMIC |
| 18 | 1 | MULDEX-03-12 | CABLE DUCT, STRAIGHT | ATOMIC |
| 19 | 1 | MULDEX-03-13 | BACK PLATE, STRAIN RELIEF | ATOMIC |
| 20 | 1 | 1M | XS BOWDEN TUBING | CAPRICORN |
| 21 | 1 | 1.75 | E3D BOWDEN COUPLING, FOR PLASTIC | FILASTRUDER |
| 22 | 1 | AQA211VL | SSR | FILASTRUDER |
| 23 | 1 | DUET 2 WIFI | DUET 3D, MAIN BOARD | FILASTRUDER |
| 24 | 1 | DUEX 5 | DUET 3D, EXPANSION BOARD | FILASTRUDER |
| 25 | 2 | FILAMENT SENSOR | DUET 3D, MAGNETIC TYPE | FILASTRUDER |
| 26 | 1 | LRS-350-24 | POWER SUPPLY | MEANWELL |
| 27 | 1 | MULDEX-03-03 | BACK PANNEL | REPKORD |

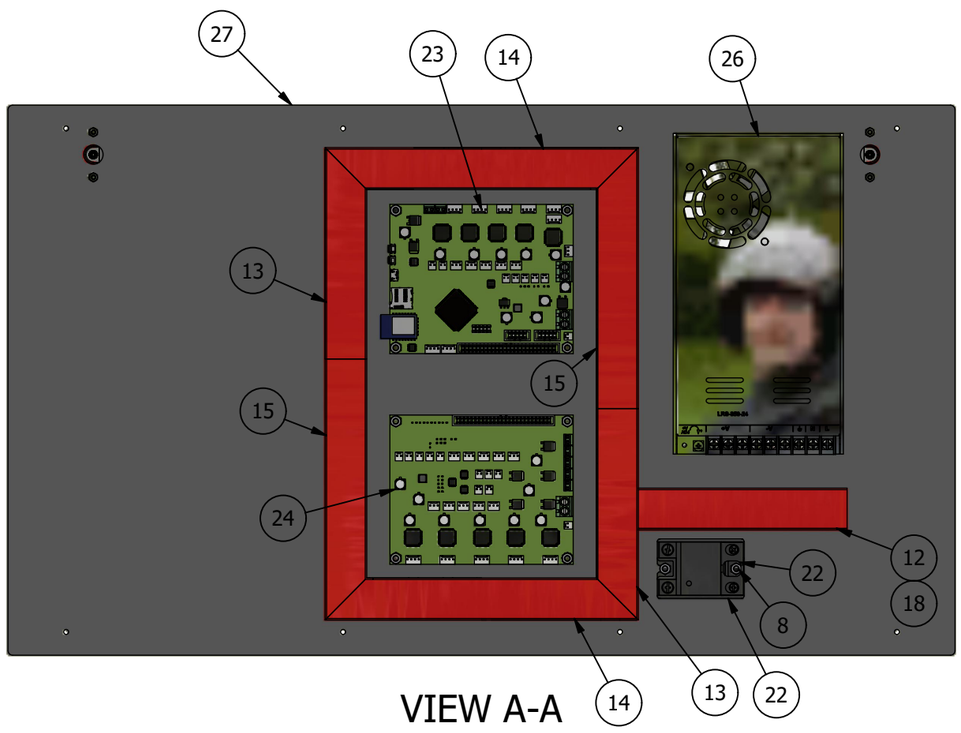

VIEW A-A

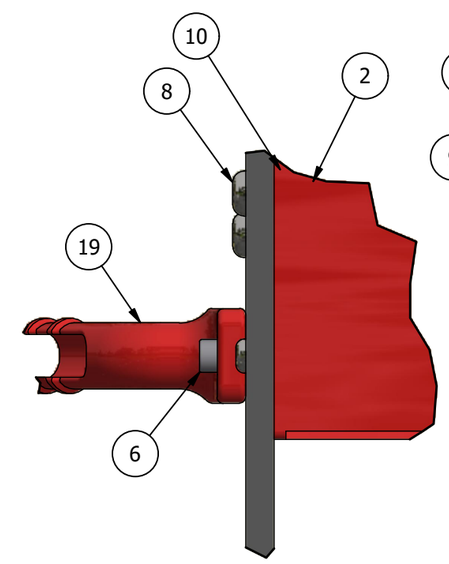

DETAIL A

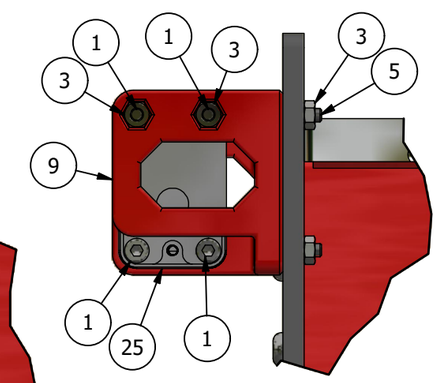

DETAIL C

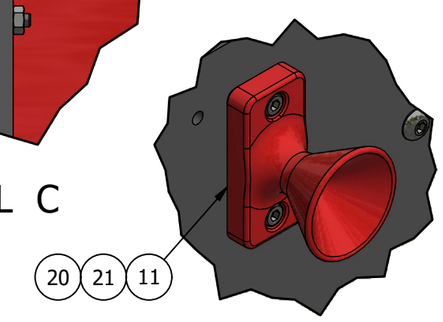

DETAIL B

**PROJECT SPONSERS:**
- 3D Fused
- Atomic Filament
- Capricorn
- Buildtak
- Keenovo
- Repkord
- Wham Bam
- Slice Engineering
- Filastruder
- Zesty Tech
- LDO Motors

**CONTACT INFO:**
**EMAIL:** mail@dddprintingworld.com
**THINGIVERSE:** 3dprintingworld
**TWITTER:** dddpworld
**YOUTUBE:** dddprintingworld

**MULDEX** REP RAP IDEX 3D PRINTER **DL1**

PART NO: MULDEX-03

TITLE BACK PANEL ASSEMBLY