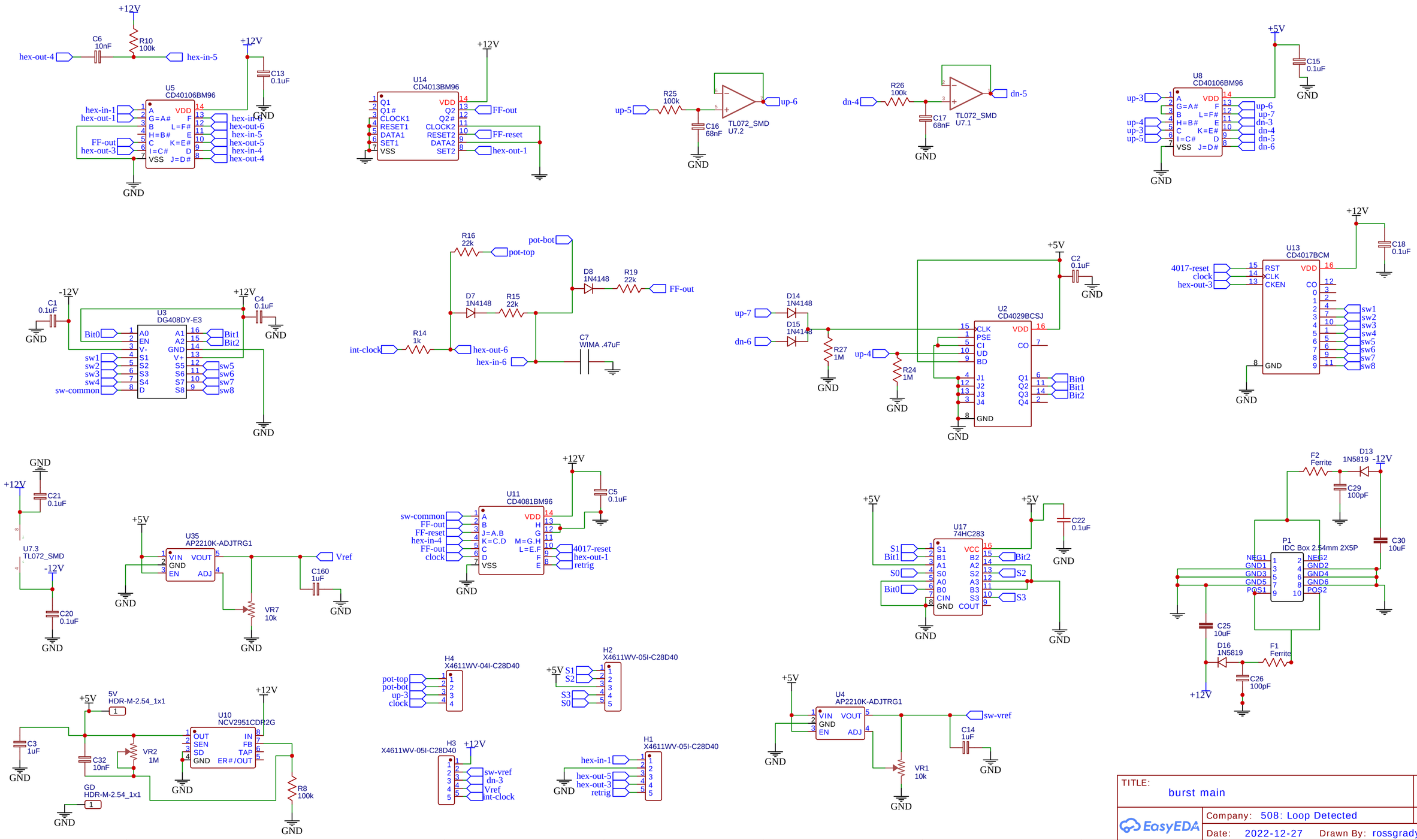

TITLE: burst main	REV: 1.0
Company: 508: Loop Detected	Sheet: 1/1
Date: 2022-12-27 Drawn By: rossgrady	