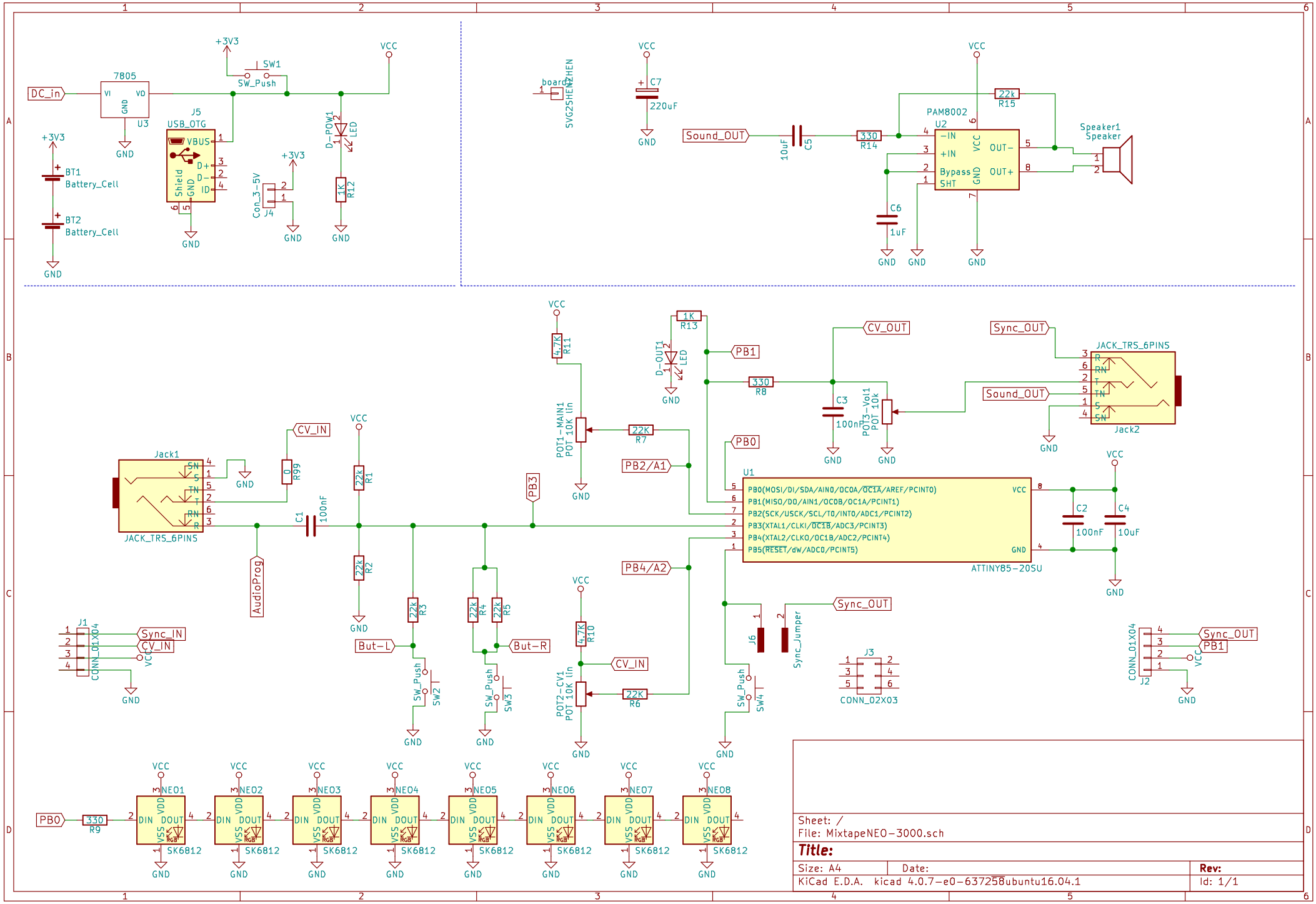
DC_in
7805
U3
VI
VO
GND
+3V3
SW1
SW_Push
VCC
J5
USB_OTG
VBUS
D+
D-
ID
Shield
BT1
Battery_Cell
BT2
Battery_Cell
Con_3-5V
J4
D-POW1
LED
1K
R12
board
SVG2SHEN
C7
220uF
Sound_OUT
10uF
C5
330
R14
PAM8002
U2
-IN
+IN
Bypass
SHT
OUT-
OUT+
22k
R15
Speaker1
Speaker
C6
1uF
Jack1
JACK_TRS_6PINS
SN
TN
T
RN
R
CV_IN
0
R99
C1
100nF
22K
R1
22K
R2
AudioProg
PB3
22K
R3
22K
R4
22K
R5
But-L
But-R
SW_Push
SW2
SW3
POT1-MAIN1
POT 10K lin
4.7K
R11
22K
R7
PB2/A1
PB4/A2
1K
R13
D-OUT1
PB1
330
R8
C3
100nF
POT3-Vol1
POT 10K
CV_OUT
Sync_OUT
Sound_OUT
JACK_TRS_6PINS
Jack2
PB0
U1
PB0(MOSI/DI/SDA/AIN0/OC0A/OC1A/AREF/PCINT0)
PB1(MISO/DO/AIN1/OC0B/OC1A/PCINT1)
PB2(SCK/USCK/SCL/T0/INT0/ADC1/PCINT2)
PB3(XTAL1/CLKI/OC1B/ADC3/PCINT3)
PB4(XTAL2/CLKO/OC1B/ADC2/PCINT4)
PB5(RESET/dW/ADC0/PCINT5)
VCC
GND
ATTINY85-20SU
C2
100nF
C4
10uF
J1
CONN_01X04
Sync_IN
CV_IN
4.7K
R10
POT2-CV1
POT 10K lin
22K
R6
J6
Sync_Jumper
J3
CONN_02X03
CONN_01X04
J2
PB1
PB0
330
R9
NEO1
NEO2
NEO3
NEO4
NEO5
NEO6
NEO7
NEO8
DIN
DOUT
VDD
VSS
SK6812
Sheet: /
File: MixtapeNEO-3000.sch
Title:
Size: A4
Date:
Rev:
KiCad E.D.A. kicad 4.0.7-e0-637258ubuntu16.04.1
Id: 1/1