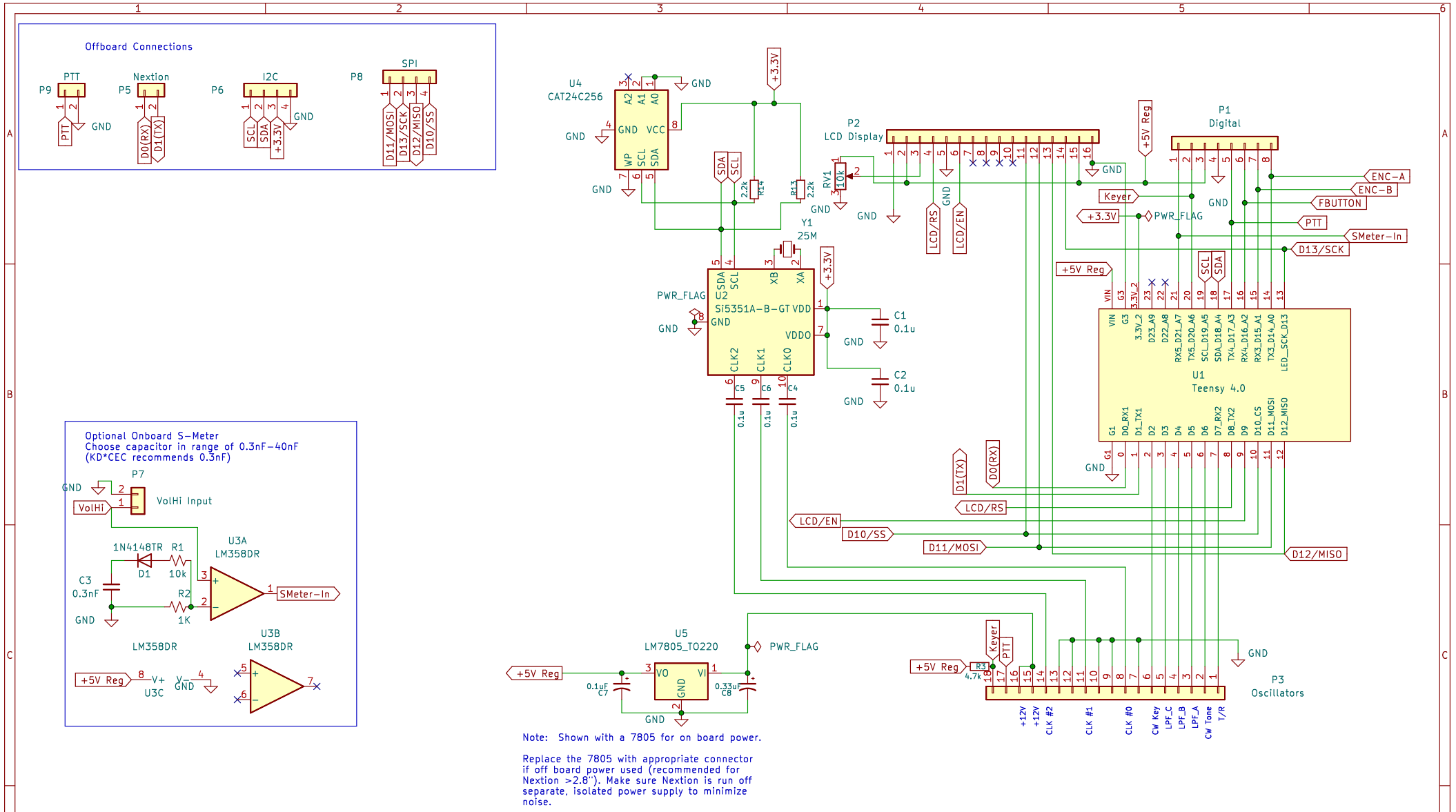

Teensy 4.0 Edition – Rev 6.A
Supports <=V5 and V6. Shown with onboard power supply. But a connector can be put on the +5v and Gnd pins of the 7805 footprint to provide external power supply.
Required for support of Netion >2.8". Includes headers for SPI, I2C, Vol-HI and PTT.

Sheet:
File: uBitx V3-6 Raduino Clone Rev 6.A teensy 4.0.kicad_sch

Title: uBITX V3,4,5,6 MB Teensy Raduino Clone with I2C

Size: A4	Date: 2023-04-23	Rev:
KiCad E.D.A. kicad 7.0.1		Id: 1/1