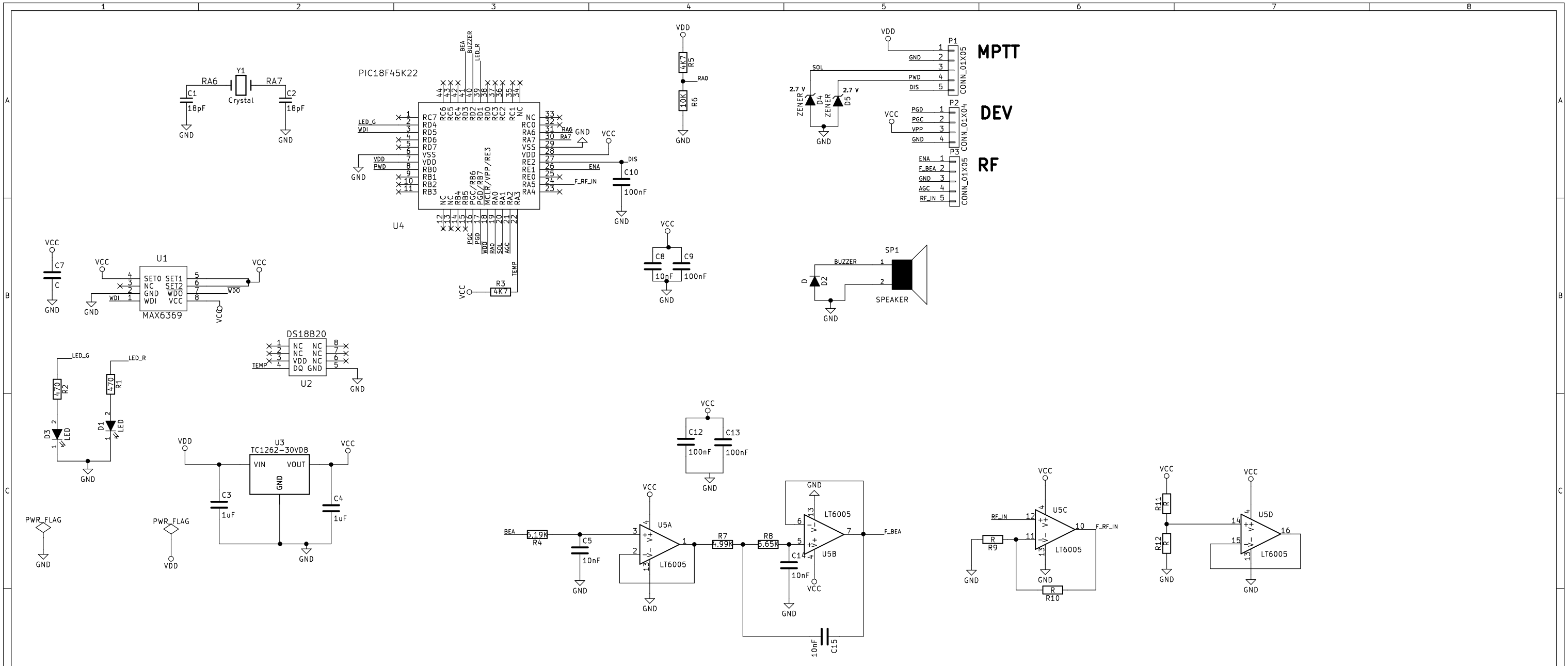


Sheet: /
File: MCU.sch

**Title:**

| Size: A3 | Date: | Rev: |
|---|---|---|
| KiCad E.D.A. kicad 4.0.4-stable | | Id: 1/1 |