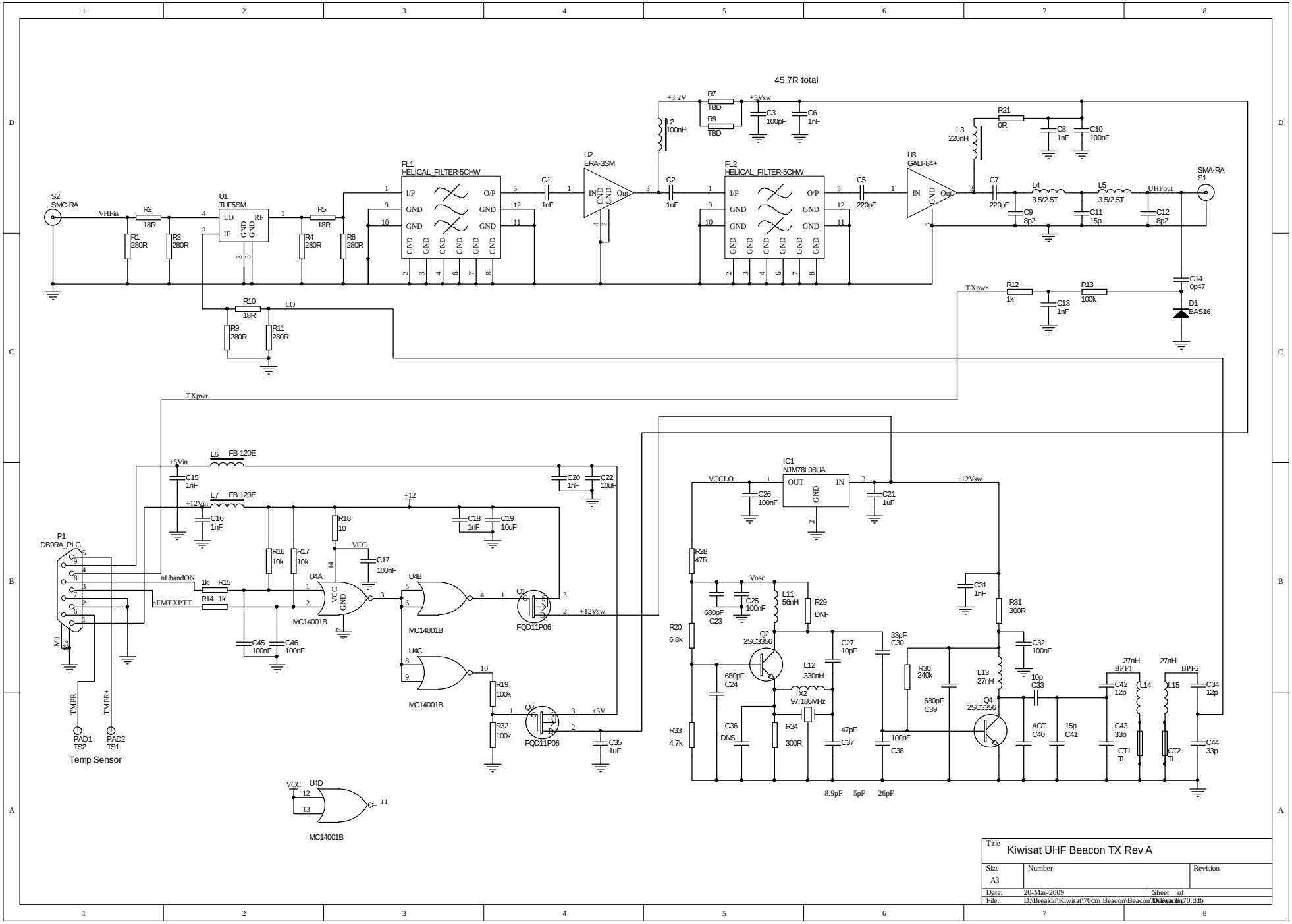

Title	Kiwisat UHF Beacon TX Rev A	
Size A3	Number	Revision
Date: 20-Mar-2009	Sheet of	
File: D:\Breakin\Kiwisat\70cm Beacon\Beacon70.ddb	Drawn By:	