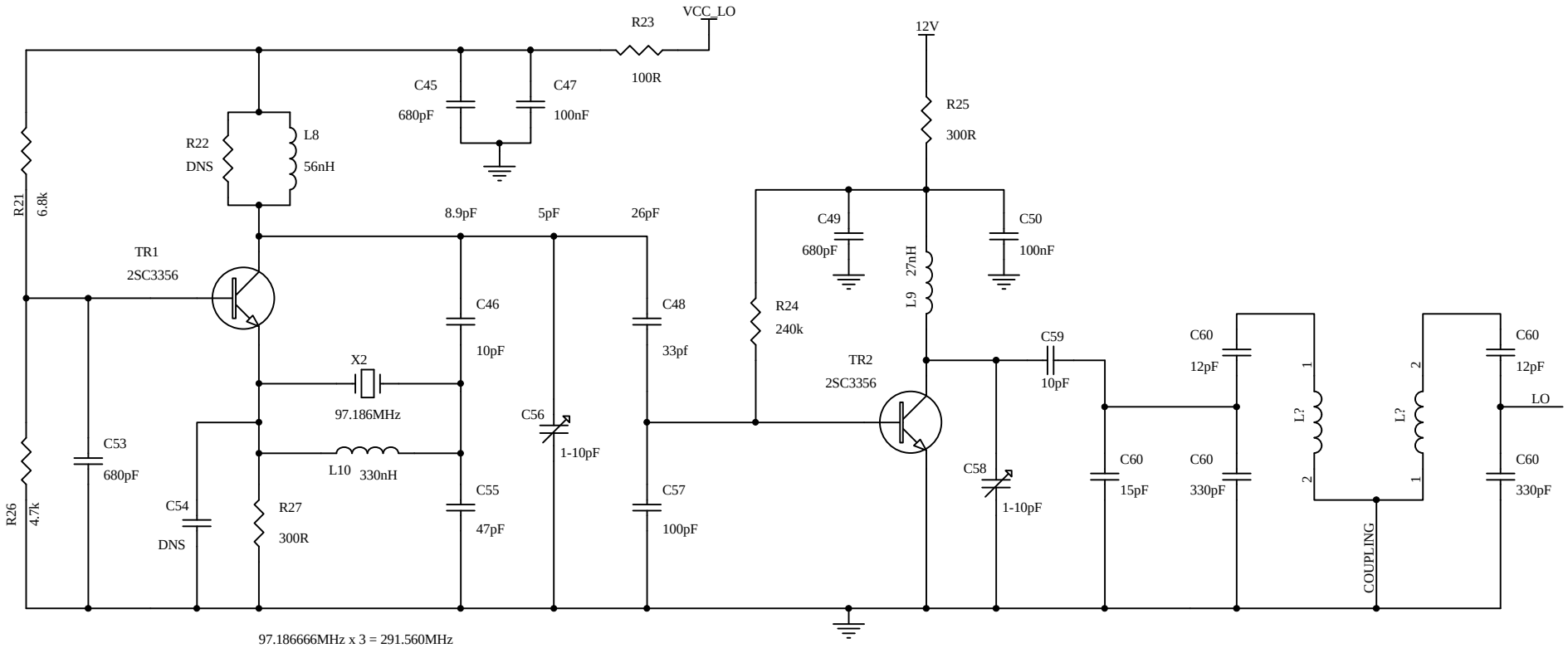

97.186666MHz x 3 = 291.560MHz

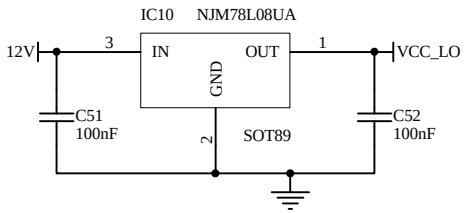

Title	UHF Beacon Transponder, Local Osc	
Size A4	Number 2008001-001	Revision 0.1
Date: 15-Oct-2008	Sheet of	
File: C:\mla\Projects\KiwiSAT\UHF Beacon Transponder\Protel\UHF Beacon Transponder.DD	Drawn By:	