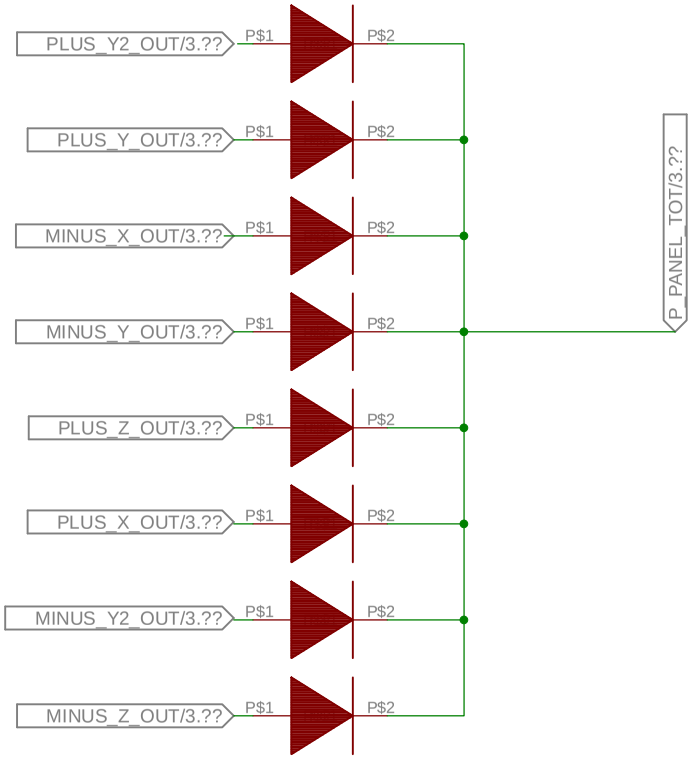
PLUS_Y2_OUT/3.??
PLUS_Y_OUT/3.??
MINUS_X_OUT/3.??
MINUS_Y_OUT/3.??
PLUS_Z_OUT/3.??
PLUS_X_OUT/3.??
MINUS_Y2_OUT/3.??
MINUS_Z_OUT/3.??
P$1
P$2
P_PANEL_TOT/3.??

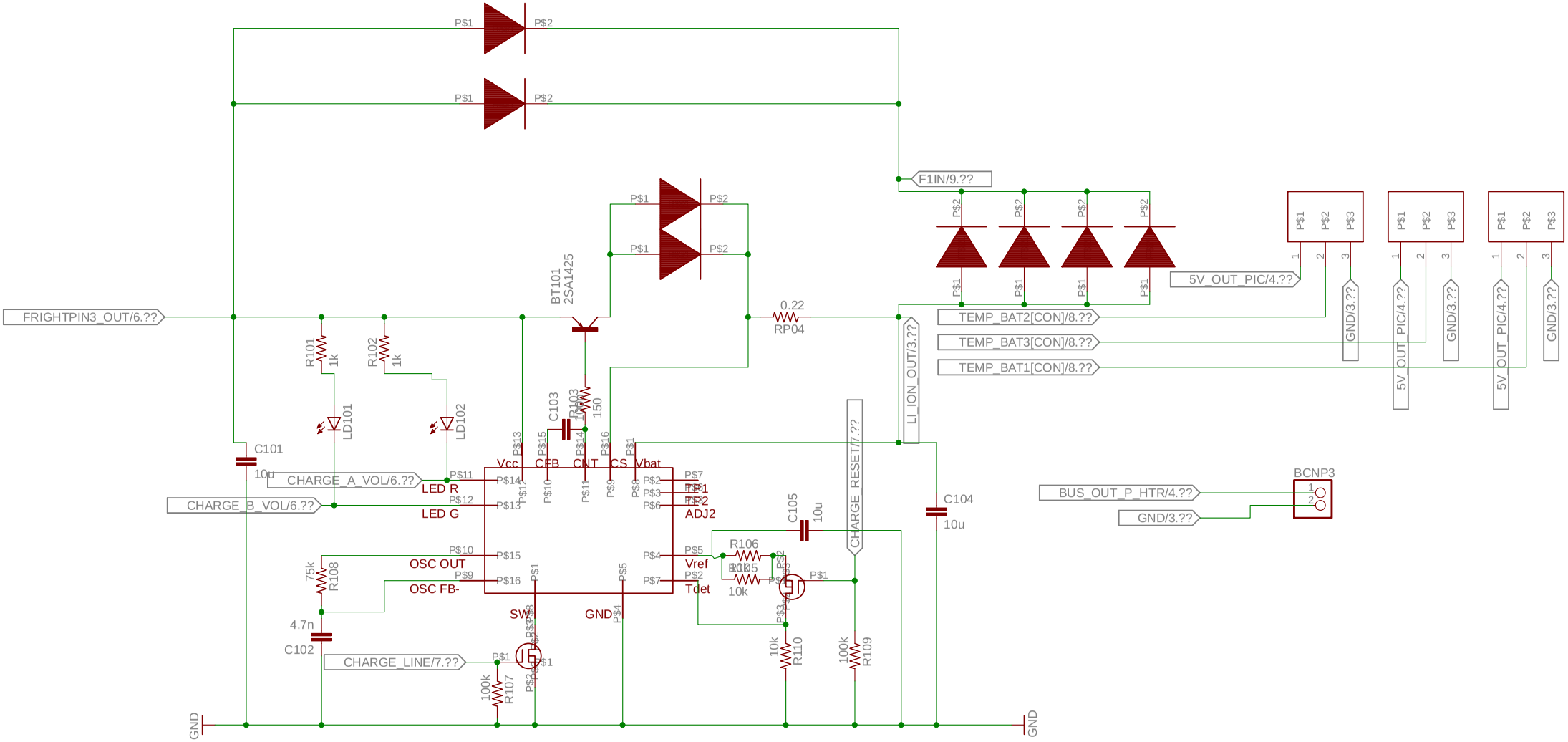
FRIGHTPIN3_OUT/6.??
F1IN/9.??
5V_OUT_PIC/4.??
TEMP_BAT2[CON]/8.??
TEMP_BAT3[CON]/8.??
TEMP_BAT1[CON]/8.??
GND/3.??
5V_OUT_PIC/4.??
LI_ION_OUT/3.??
CHARGE_RESET/7.??
BUS_OUT_P_HTR/4.??
BCNP3
CHARGE_A_VOL/6.??
CHARGE_B_VOL/6.??
CHARGE_LINE/7.??
BT101
2SA1425
RP04
0.22
R101
1k
R102
1k
LD101
LD102
C101
10u
C103
R103
150
C104
10u
C105
10u
R106
R105
10k
R107
100k
R108
75k
C102
4.7n
R109
100k
R110
10k
Vcc
CFB
CNT
CS
Vbat
TP1
TP2
ADJ2
Vref
Tdet
LED R
LED G
OSC OUT
OSC FB-
SW
GND
GND
GND

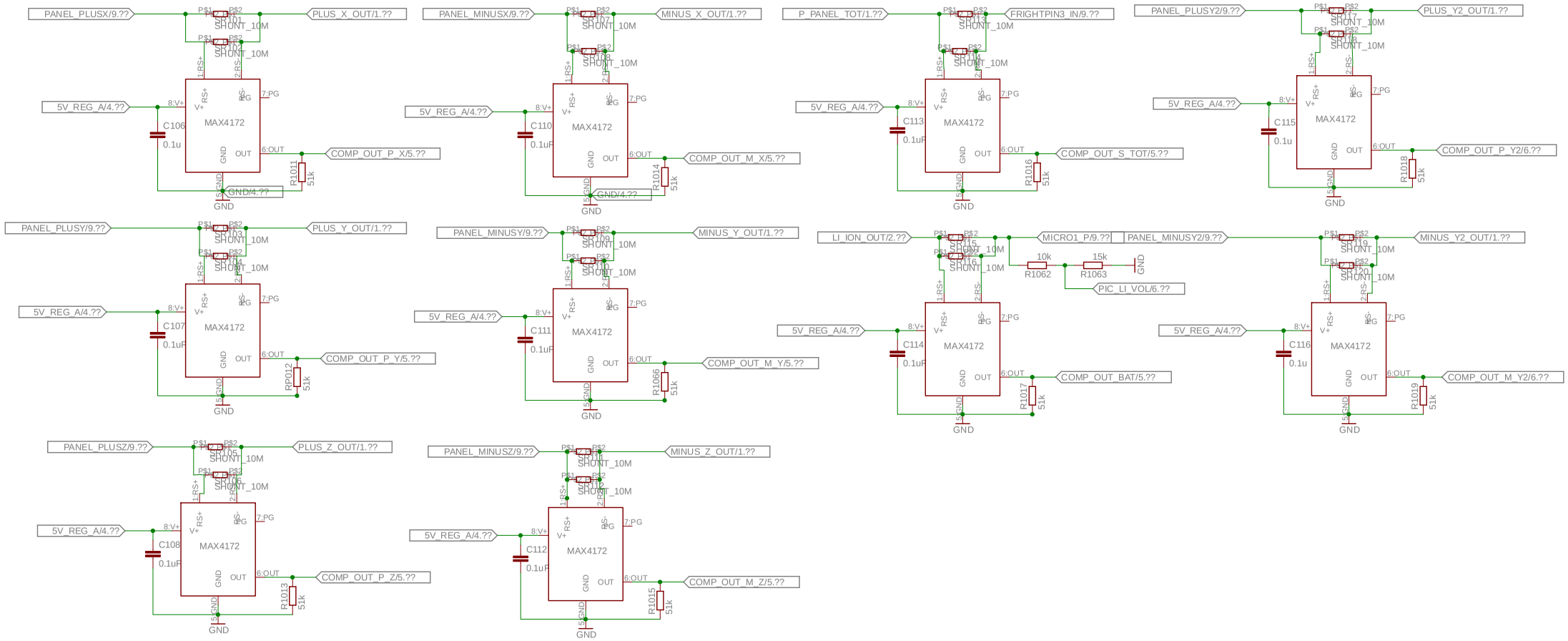
PANEL_PLUSX/9.??
PLUS_X_OUT/1.??
SR101
SR102
SHUNT_10M
5V_REG_A/4.??
C106
0.1u
MAX4172
COMP_OUT_P_X/5.??
R1011
51k
GND/4.??
GND
PANEL_MINUSX/9.??
MINUS_X_OUT/1.??
SR107
SR108
C110
0.1uF
COMP_OUT_M_X/5.??
R1014
P_PANEL_TOT/1.??
FRIGHTPIN3_IN/9.??
SR113
SR114
C113
COMP_OUT_S_TOT/5.??
R1016
PANEL_PLUSY2/9.??
PLUS_Y2_OUT/1.??
SR117
SR118
C115
COMP_OUT_P_Y2/6.??
R1018
PANEL_PLUSY/9.??
PLUS_Y_OUT/1.??
SR103
SR104
C107
0.1uF
COMP_OUT_P_Y/5.??
RP012
PANEL_MINUSY/9.??
MINUS_Y_OUT/1.??
SR109
SR110
C111
COMP_OUT_M_Y/5.??
R1066
LI_ION_OUT/2.??
MICRO1_P/9.??
PANEL_MINUSY2/9.??
SR115
SR116
10k
R1062
15k
R1063
PIC_LI_VOL/6.??
C114
COMP_OUT_BAT/5.??
R1017
MINUS_Y2_OUT/1.??
SR119
SR120
C116
COMP_OUT_M_Y2/6.??
R1019
PANEL_PLUSZ/9.??
PLUS_Z_OUT/1.??
SR105
SR106
C108
0.1uF
COMP_OUT_P_Z/5.??
R1013
PANEL_MINUSZ/9.??
MINUS_Z_OUT/1.??
SR111
SR112
C112
COMP_OUT_M_Z/5.??
R1015

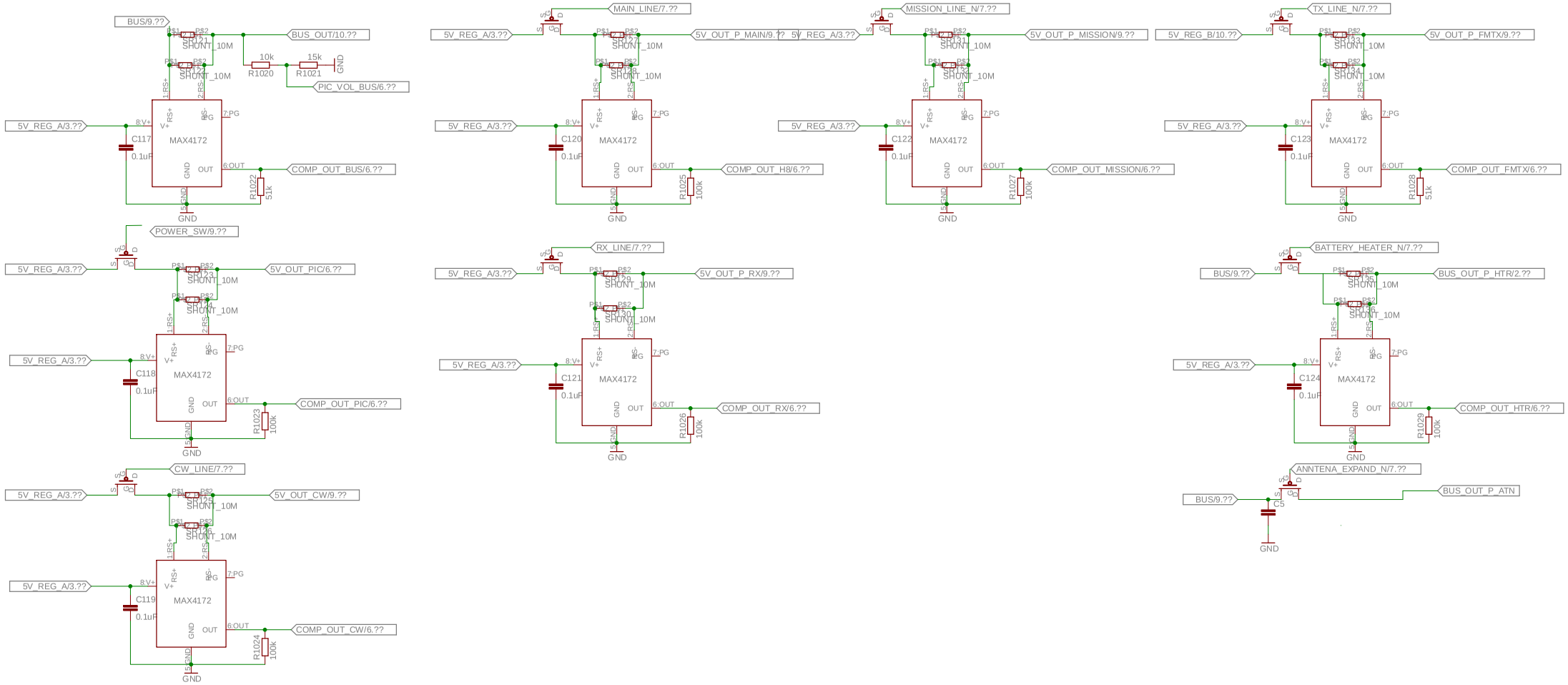
BUS/9.??
BUS_OUT/10.??
SHUNT_10M
10k
R1020
15k
R1021
GND
PIC_VOL_BUS/6.??
5V_REG_A/3.??
C117
0.1uF
MAX4172
COMP_OUT_BUS/6.??
R1022
51k
MAIN_LINE/7.??
5V_OUT_P_MAIN/9.??
C120
COMP_OUT_H8/6.??
R1025
100k
MISSION_LINE_N/7.??
5V_OUT_P_MISSION/9.??
C122
COMP_OUT_MISSION/6.??
R1027
TX_LINE_N/7.??
5V_REG_B/10.??
5V_OUT_P_FMTX/9.??
C123
COMP_OUT_FMTX/6.??
R1028
POWER_SW/9.??
5V_OUT_PIC/6.??
C118
COMP_OUT_PIC/6.??
R1023
RX_LINE/7.??
5V_OUT_P_RX/9.??
C121
COMP_OUT_RX/6.??
R1026
BATTERY_HEATER_N/7.??
BUS_OUT_P_HTR/2.??
C124
COMP_OUT_HTR/6.??
R1029
CW_LINE/7.??
5V_OUT_CW/9.??
C119
COMP_OUT_CW/6.??
R1024
ANNTENA_EXPAND_N/7.??
BUS_OUT_P_ATN
C5

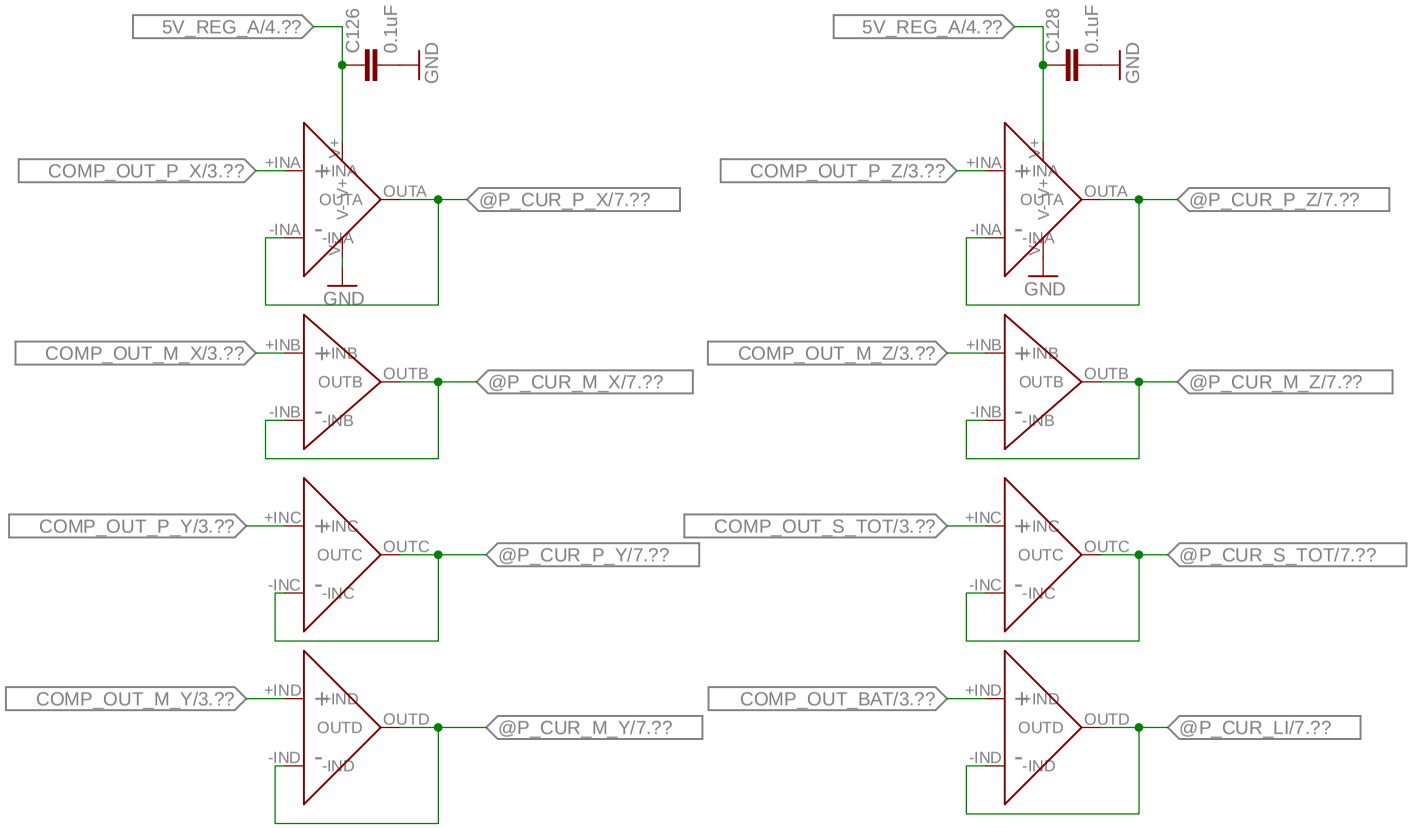
5V_REG_A/4.??
C126
0.1uF
GND
COMP_OUT_P_X/3.??
+INA
-INA
OUTA
@P_CUR_P_X/7.??
COMP_OUT_M_X/3.??
+INB
-INB
OUTB
@P_CUR_M_X/7.??
COMP_OUT_P_Y/3.??
+INC
-INC
OUTC
@P_CUR_P_Y/7.??
COMP_OUT_M_Y/3.??
+IND
-IND
OUTD
@P_CUR_M_Y/7.??
5V_REG_A/4.??
C128
0.1uF
GND
COMP_OUT_P_Z/3.??
+INA
-INA
OUTA
@P_CUR_P_Z/7.??
COMP_OUT_M_Z/3.??
+INB
-INB
OUTB
@P_CUR_M_Z/7.??
COMP_OUT_S_TOT/3.??
+INC
-INC
OUTC
@P_CUR_S_TOT/7.??
COMP_OUT_BAT/3.??
+IND
-IND
OUTD
@P_CUR_LI/7.??

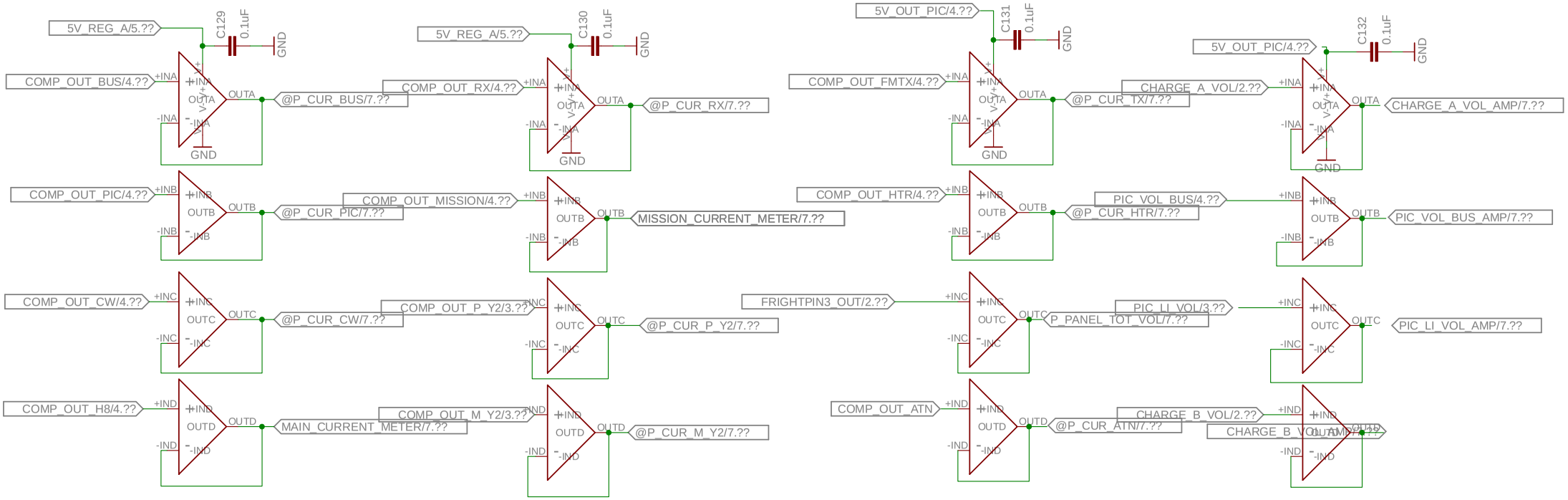
5V_REG_A/5.??
C129
0.1uF
GND
COMP_OUT_BUS/4.??
+INA
-INA
OUTA
@P_CUR_BUS/7.??
COMP_OUT_PIC/4.??
+INB
-INB
OUTB
@P_CUR_PIC/7.??
COMP_OUT_CW/4.??
+INC
-INC
OUTC
@P_CUR_CW/7.??
COMP_OUT_H8/4.??
+IND
-IND
OUTD
MAIN_CURRENT_METER/7.??
5V_REG_A/5.??
C130
0.1uF
GND
COMP_OUT_RX/4.??
@P_CUR_RX/7.??
COMP_OUT_MISSION/4.??
MISSION_CURRENT_METER/7.??
COMP_OUT_P_Y2/3.??
@P_CUR_P_Y2/7.??
COMP_OUT_M_Y2/3.??
@P_CUR_M_Y2/7.??
5V_OUT_PIC/4.??
C131
0.1uF
GND
COMP_OUT_FMTX/4.??
@P_CUR_TX/7.??
COMP_OUT_HTR/4.??
@P_CUR_HTR/7.??
FRIGHTPIN3_OUT/2.??
P_PANEL_TOT_VOL/7.??
COMP_OUT_ATN
@P_CUR_ATN/7.??
5V_OUT_PIC/4.??
C132
0.1uF
GND
CHARGE_A_VOL/2.??
CHARGE_A_VOL_AMP/7.??
PIC_VOL_BUS/4.??
PIC_VOL_BUS_AMP/7.??
PIC_LI_VOL/3.??
PIC_LI_VOL_AMP/7.??
CHARGE_B_VOL/2.??
CHARGE_B_VOL_AMP/7.??

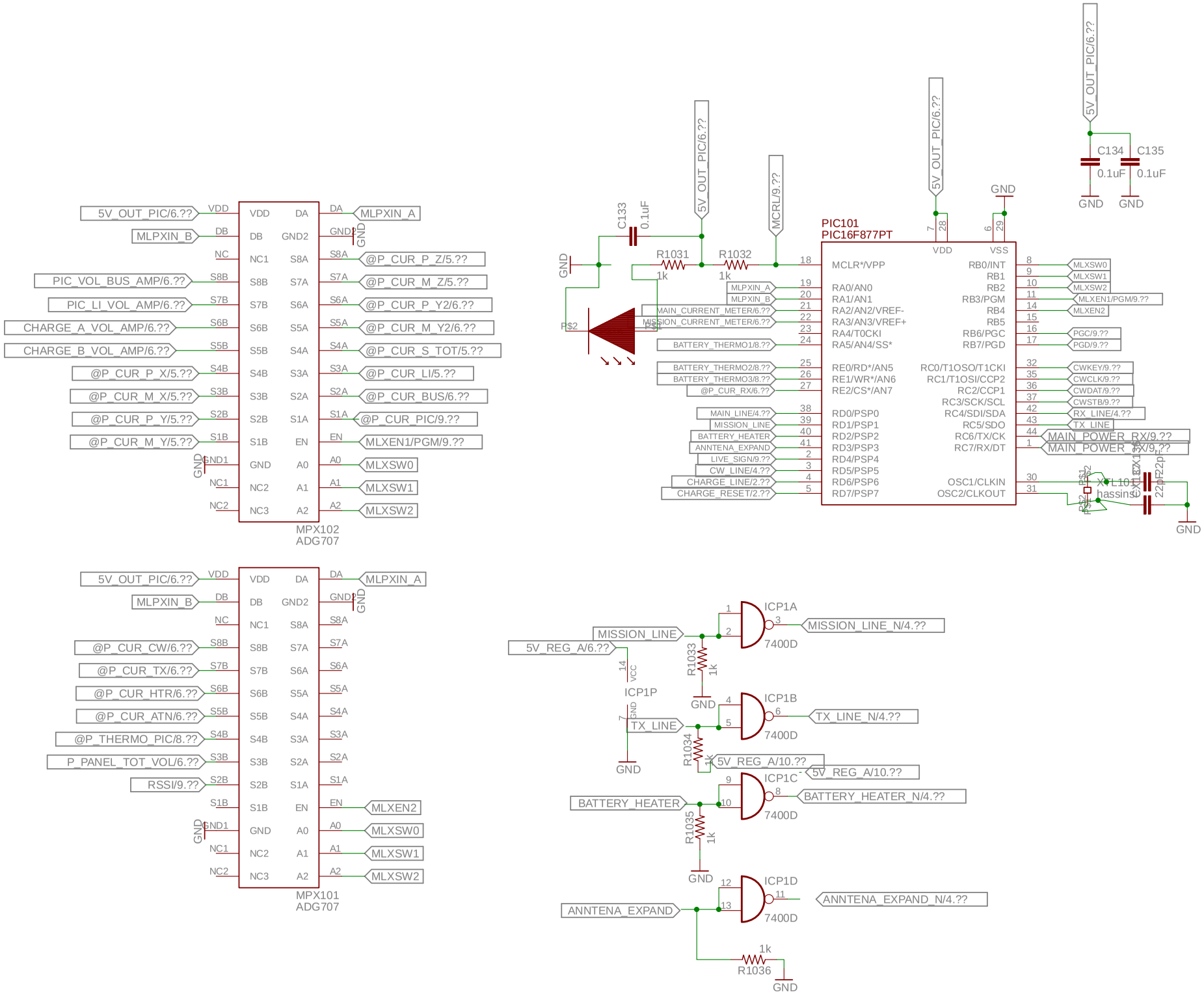
MPX102
ADG707
MPX101
ADG707
PIC101
PIC16F877PT
5V_OUT_PIC/6.??
MCRL/9.??
GND
C133
0.1uF
C134
C135
0.1uF
0.1uF
R1031
1k
R1032
1k
P$2
MLPXIN_A
MLPXIN_B
MAIN_CURRENT_METER/6.??
MISSION_CURRENT_METER/6.??
BATTERY_THERMO1/8.??
BATTERY_THERMO2/8.??
BATTERY_THERMO3/8.??
@P_CUR_RX/6.??
MAIN_LINE/4.??
MISSION_LINE
BATTERY_HEATER
ANNTENA_EXPAND
LIVE_SIGN/9.??
CW_LINE/4.??
CHARGE_LINE/2.??
CHARGE_RESET/2.??
MLXSW0
MLXSW1
MLXSW2
MLXEN1/PGM/9.??
MLXEN2
PGC/9.??
PGD/9.??
CWKEY/9.??
CWCLK/9.??
CWDAT/9.??
CWSTB/9.??
RX_LINE/4.??
TX_LINE
MAIN_POWER_RX/9.??
MAIN_POWER_TX/9.??
XTL101
hassine
22pF
22pF
ICP1A
ICP1B
ICP1C
ICP1D
ICP1P
7400D
MISSION_LINE_N/4.??
TX_LINE_N/4.??
BATTERY_HEATER_N/4.??
ANNTENA_EXPAND_N/4.??
5V_REG_A/6.??
5V_REG_A/10.??
R1033
1k
R1034
1k
R1035
1k
R1036
1k
@P_CUR_P_Z/5.??
@P_CUR_M_Z/5.??
@P_CUR_P_Y2/6.??
@P_CUR_M_Y2/6.??
@P_CUR_S_TOT/5.??
@P_CUR_LI/5.??
@P_CUR_BUS/6.??
@P_CUR_PIC/9.??
PIC_VOL_BUS_AMP/6.??
PIC_LI_VOL_AMP/6.??
CHARGE_A_VOL_AMP/6.??
CHARGE_B_VOL_AMP/6.??
@P_CUR_P_X/5.??
@P_CUR_M_X/5.??
@P_CUR_P_Y/5.??
@P_CUR_M_Y/5.??
@P_CUR_CW/6.??
@P_CUR_TX/6.??
@P_CUR_HTR/6.??
@P_CUR_ATN/6.??
@P_THERMO_PIC/8.??
P_PANEL_TOT_VOL/6.??
RSSI/9.??

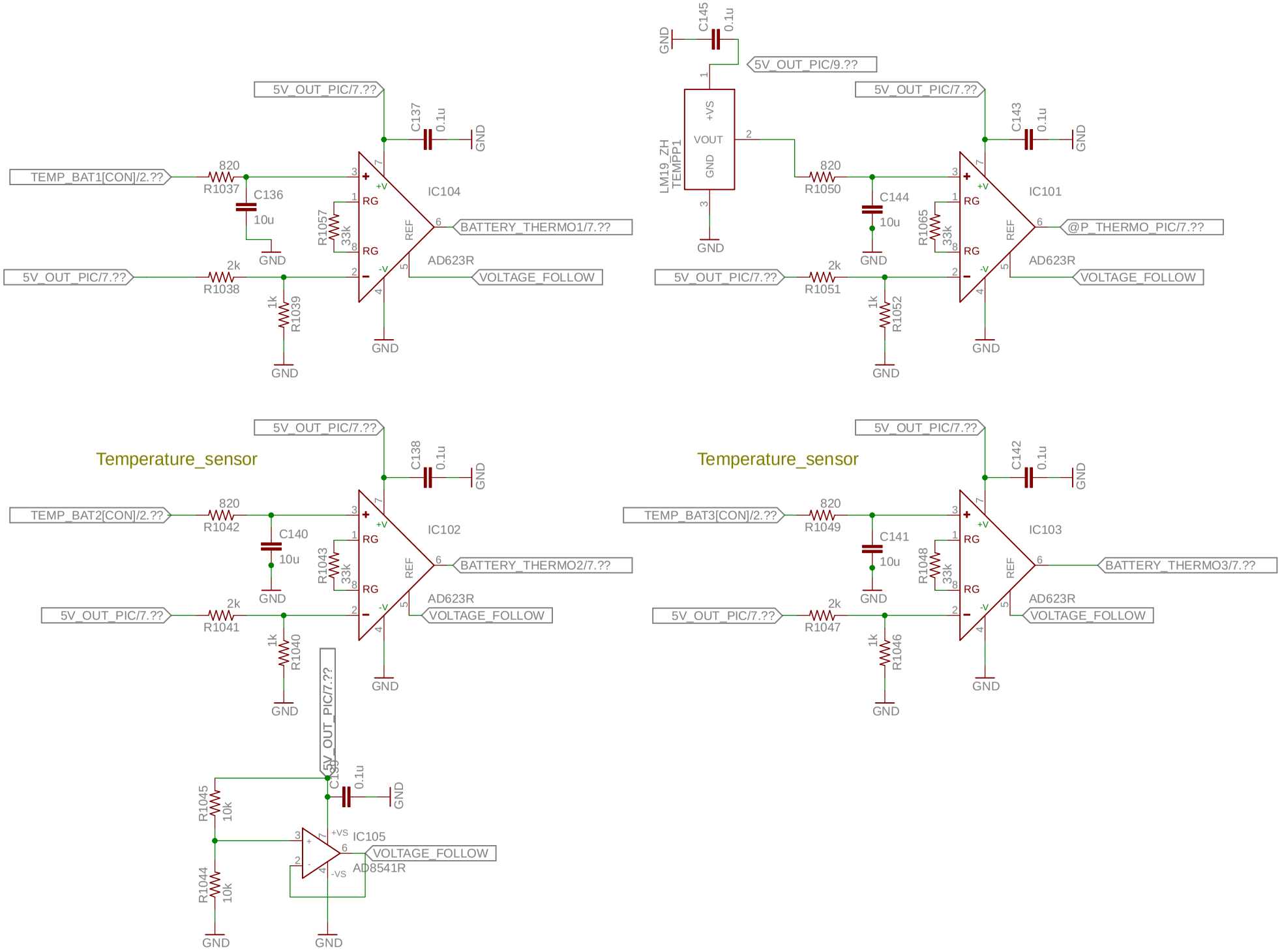
Temperature_sensor
Temperature_sensor
5V_OUT_PIC/7.??
TEMP_BAT1[CON]/2.??
TEMP_BAT2[CON]/2.??
TEMP_BAT3[CON]/2.??
BATTERY_THERMO1/7.??
BATTERY_THERMO2/7.??
BATTERY_THERMO3/7.??
@P_THERMO_PIC/7.??
VOLTAGE_FOLLOW
5V_OUT_PIC/9.??
LM19_ZH
TEMPP1
+VS
VOUT
GND
IC104
IC102
IC101
IC103
IC105
AD623R
AD8541R
R1037
R1038
R1039
R1042
R1041
R1040
R1050
R1051
R1052
R1049
R1047
R1046
R1057
R1043
R1065
R1048
R1045
R1044
C136
C140
C144
C141
C137
C138
C143
C142
C145
C139
820
2k
1k
33k
10k
10u
0.1u
+V
-V
RG
REF

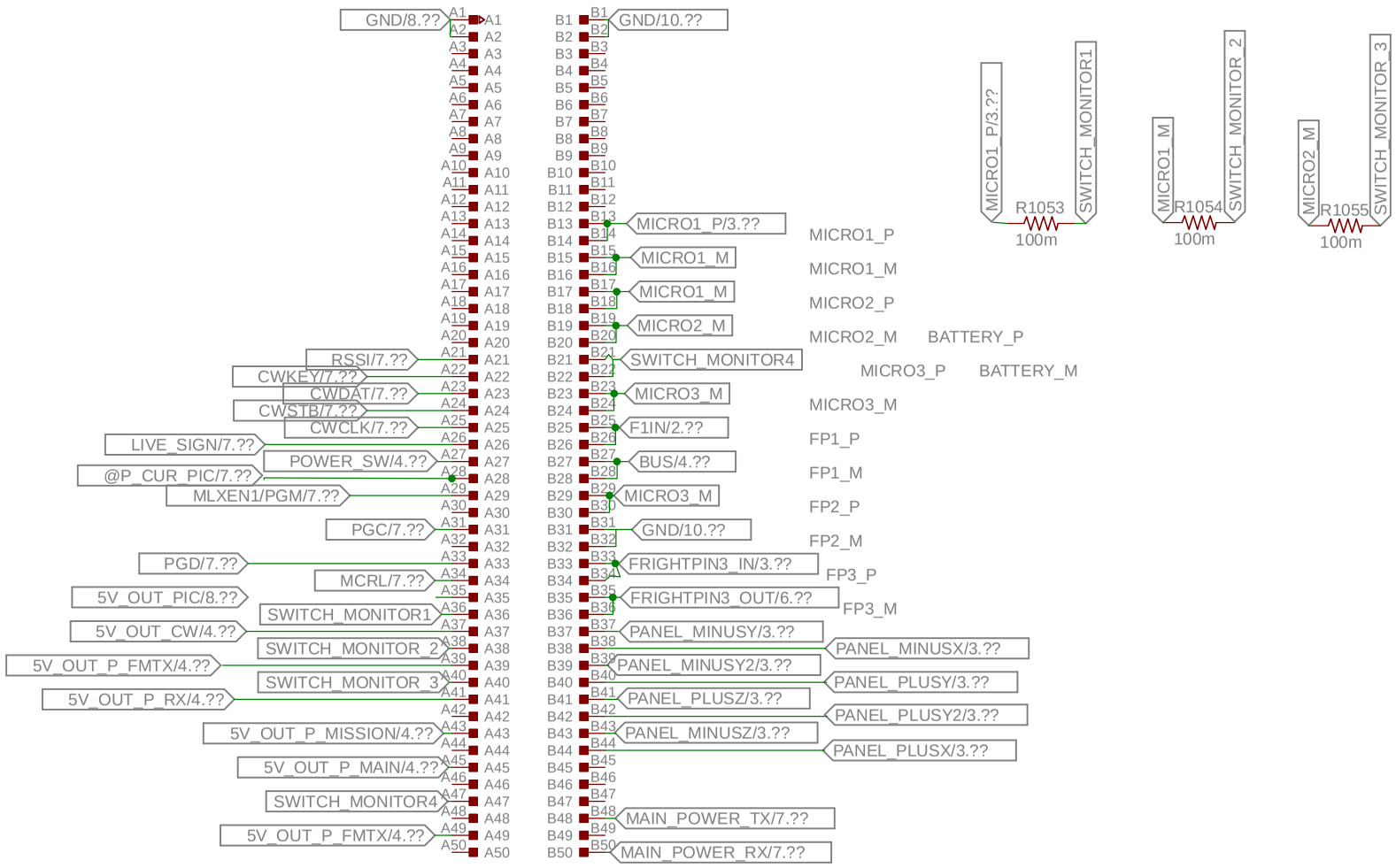
GND/8.??
GND/10.??
MICRO1_P/3.??
MICRO1_M
MICRO1_M
MICRO2_M
SWITCH_MONITOR4
MICRO3_M
F1IN/2.??
BUS/4.??
MICRO3_M
GND/10.??
FRIGHTPIN3_IN/3.??
FRIGHTPIN3_OUT/6.??
PANEL_MINUSY/3.??
PANEL_MINUSY2/3.??
PANEL_PLUSZ/3.??
PANEL_MINUSZ/3.??
MAIN_POWER_TX/7.??
MAIN_POWER_RX/7.??
RSSI/7.??
CWKEY/7.??
CWDAT/7.??
CWSTB/7.??
CWCLK/7.??
LIVE_SIGN/7.??
POWER_SW/4.??
@P_CUR_PIC/7.??
MLXEN1/PGM/7.??
PGC/7.??
PGD/7.??
MCRL/7.??
5V_OUT_PIC/8.??
SWITCH_MONITOR1
5V_OUT_CW/4.??
SWITCH_MONITOR_2
5V_OUT_P_FMTX/4.??
SWITCH_MONITOR_3
5V_OUT_P_RX/4.??
5V_OUT_P_MISSION/4.??
5V_OUT_P_MAIN/4.??
SWITCH_MONITOR4
5V_OUT_P_FMTX/4.??
MICRO1_P
MICRO1_M
MICRO2_P
MICRO2_M
BATTERY_P
MICRO3_P
BATTERY_M
MICRO3_M
FP1_P
FP1_M
FP2_P
FP2_M
FP3_P
FP3_M
PANEL_MINUSX/3.??
PANEL_PLUSY/3.??
PANEL_PLUSY2/3.??
PANEL_PLUSX/3.??
MICRO1_P/3.??
R1053
100m
SWITCH_MONITOR1
MICRO1_M
R1054
100m
SWITCH_MONITOR_2
MICRO2_M
R1055
100m
SWITCH_MONITOR_3

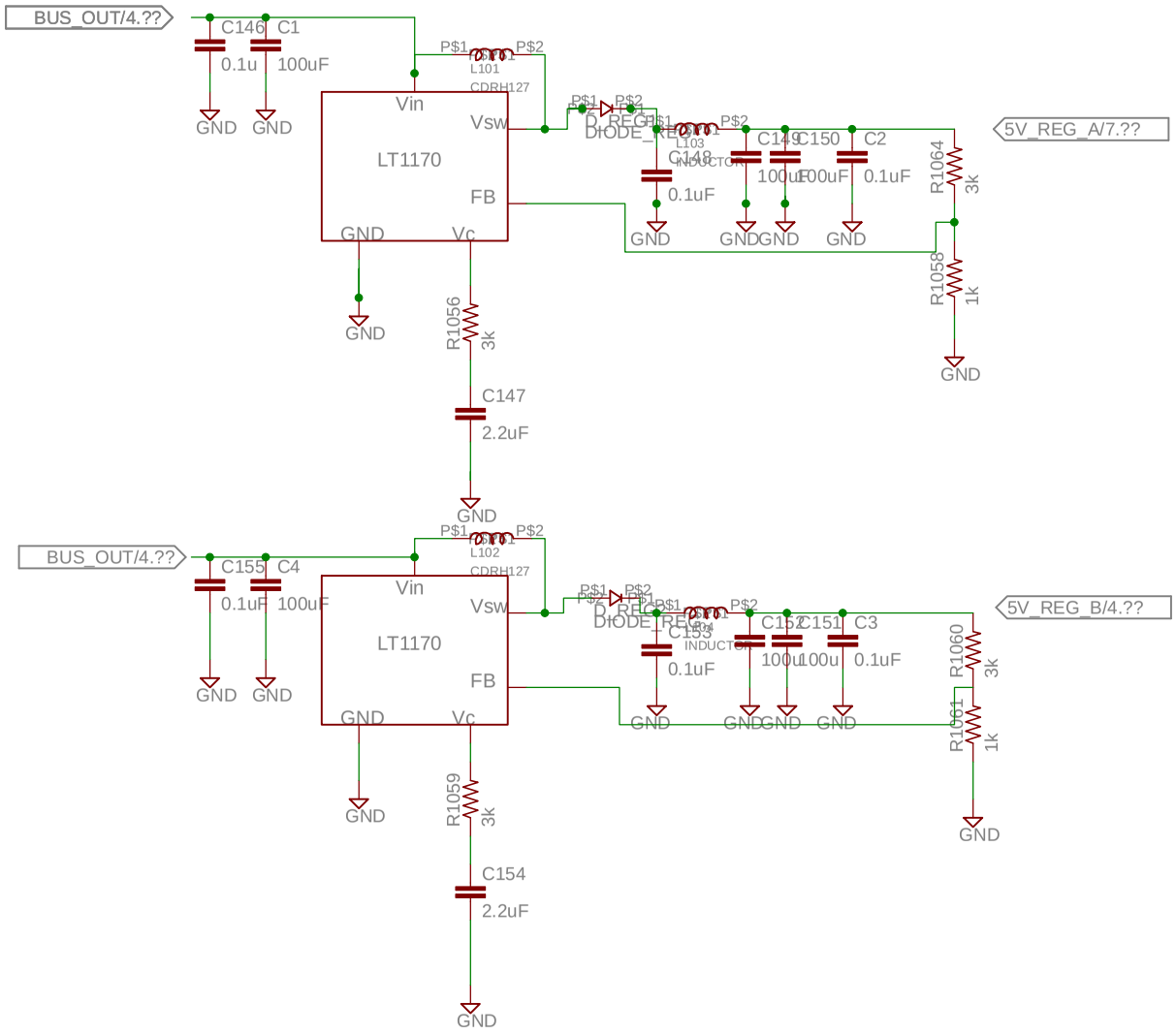
BUS_OUT/4.??
C146
C1
0.1u
100uF
GND
GND
P$1
P$2
L101
CDRH127
Vin
Vsw
LT1170
FB
GND
Vc
GND
R1056
3k
C147
2.2uF
GND
D_REG1
DIODE_REGULATOR
L103
INDUCTOR
C148
0.1uF
C149
100uF
C150
100uF
C2
0.1uF
GND
GND
GND
GND
R1064
3k
R1058
1k
GND
5V_REG_A/7.??
BUS_OUT/4.??
C155
C4
0.1uF
100uF
GND
GND
P$1
P$2
L102
CDRH127
Vin
Vsw
LT1170
FB
GND
Vc
GND
R1059
3k
C154
2.2uF
GND
D_REG2
DIODE_REGULATOR
L104
INDUCTOR
C153
0.1uF
C152
100u
C151
100u
C3
0.1uF
GND
GND
GND
GND
R1060
3k
R1061
1k
GND
5V_REG_B/4.??