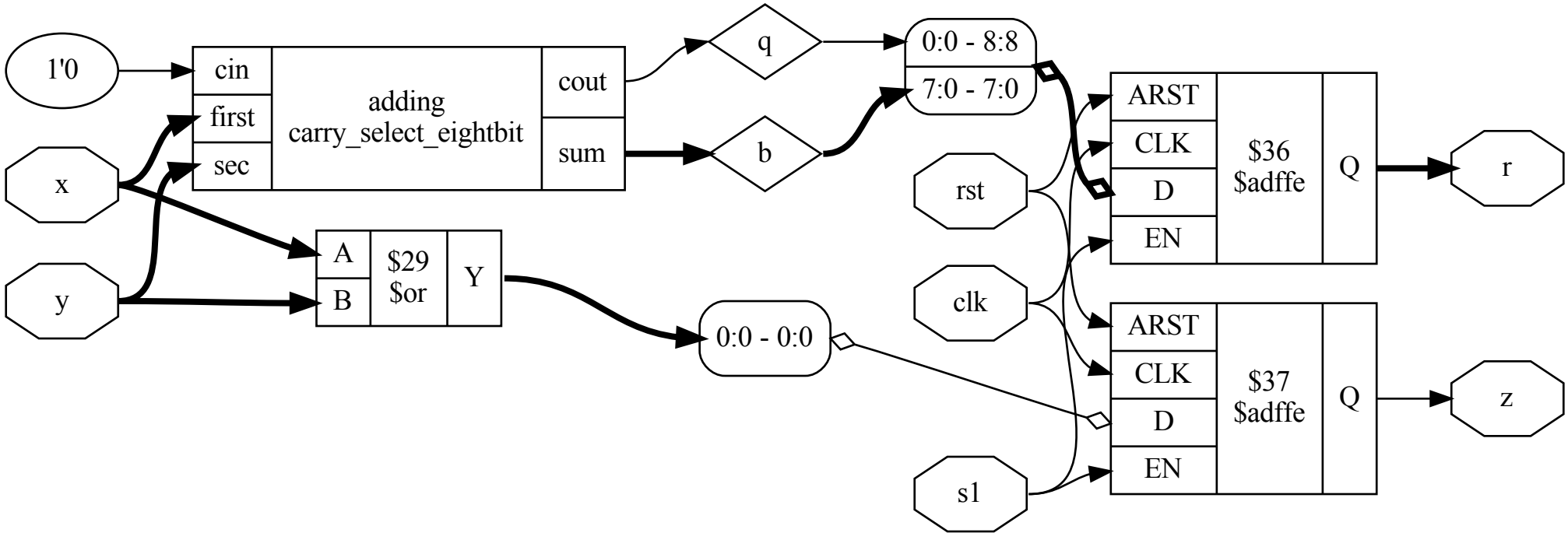
1'0
x
y
cin
first
sec
adding
carry_select_eightbit
cout
sum
q
b
A
B
$29
$or
Y
0:0 - 0:0
0:0 - 8:8
7:0 - 7:0
rst
clk
s1
ARST
CLK
D
EN
$36
$adffe
Q
r
ARST
CLK
D
EN
$37
$adffe
Q
z

test