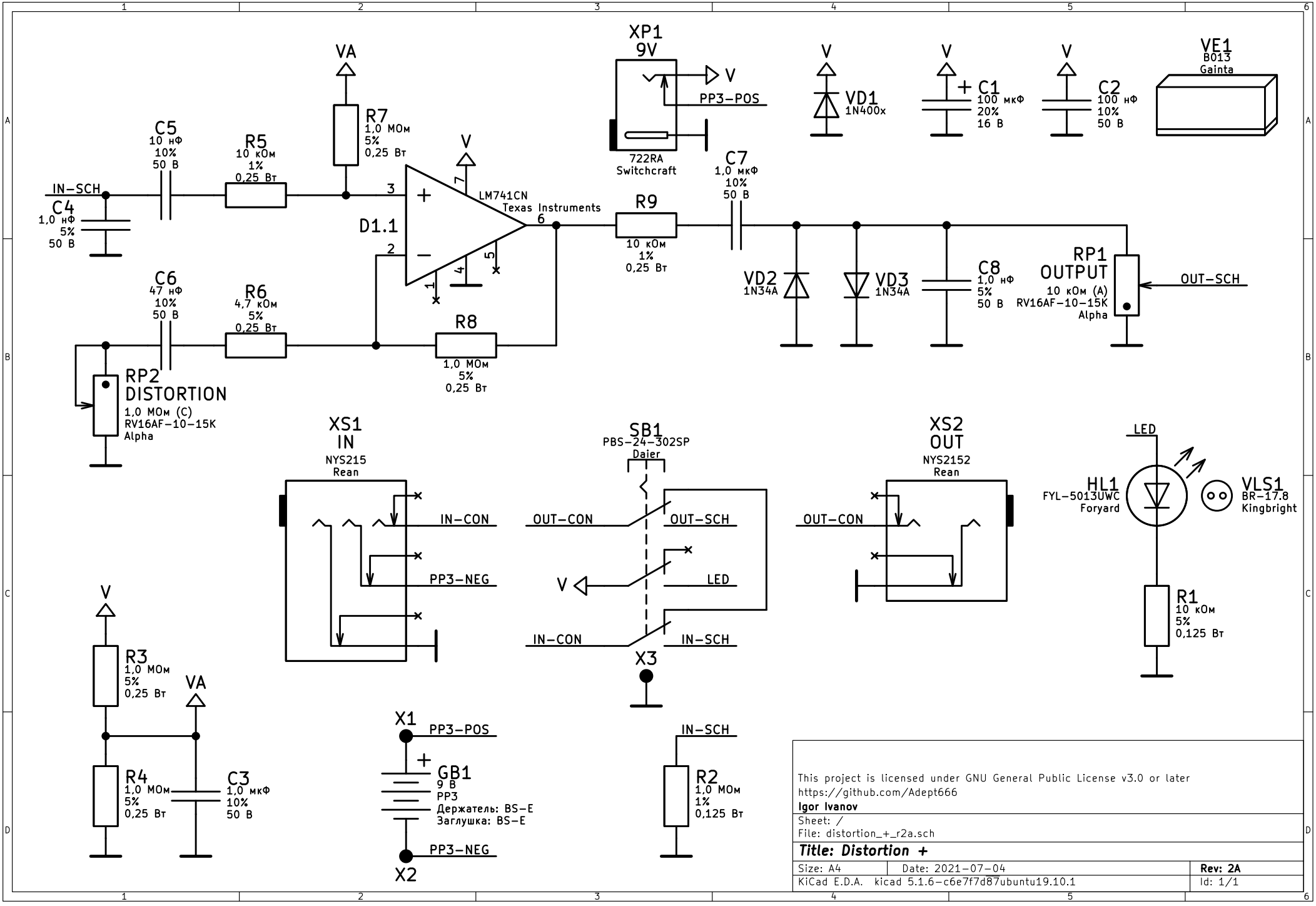


This project is licensed under GNU General Public License v3.0 or later
https://github.com/Adept666

**Igor Ivanov**

Sheet: /
File: distortion_+_r2a.sch

**Title: Distortion +**

| | | |
|---|---|---|
| Size: A4 | Date: 2021-07-04 | **Rev: 2A** |
| KiCad E.D.A. kicad 5.1.6-c6e7f7d87ubuntu19.10.1 | | Id: 1/1 |