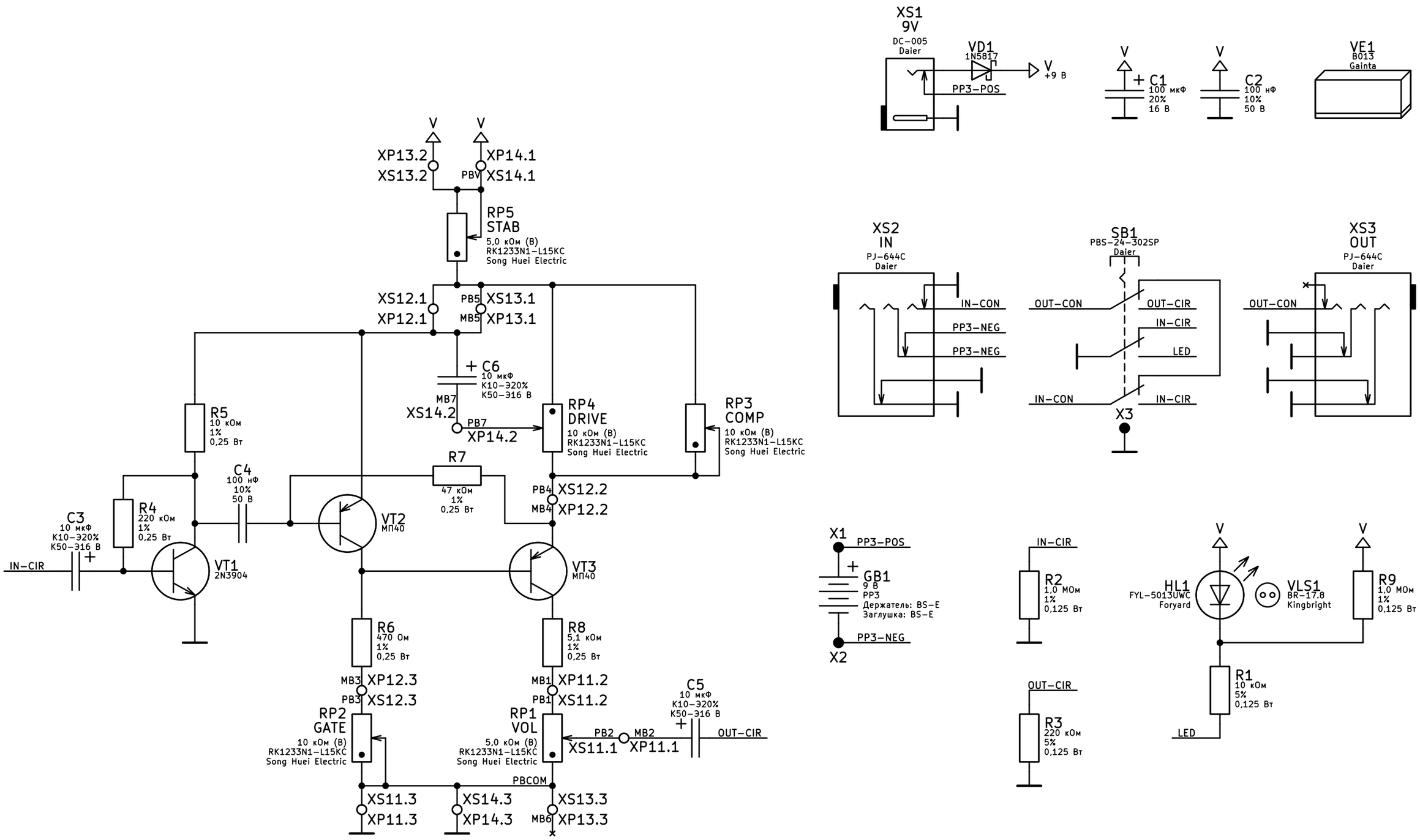

1. XP11...14: PLS-03.
2. XS11...14: PBS-03R.

This project is licensed under GNU General Public License v3.0 or later
https://github.com/Adept666

Igor Ivanov

Sheet: /
File: fuzz_factory_r1d_r1c.sch

Title: Fuzz Factory

Size: A3	Date: 2022-01-09	**Rev: MB:1D/PB:1C**
KiCad E.D.A. kicad 5.1.6-c6e7f7d87ubuntu19.10.1		Id: 1/1