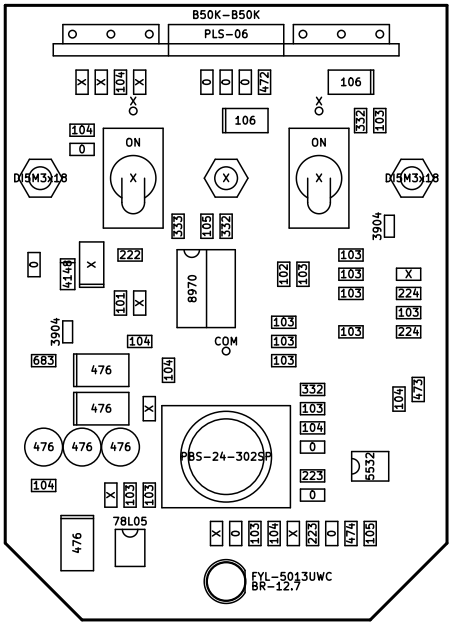

This project is licensed under GNU General Public License v3.0 or later
https://github.com/Adept666

Igor Ivanov

Sheet:
File: big_devil_vibrato_r2a.kicad_pcb

Title: Big Devil Vibrato

Size: A4	Date: 2023-03-19	**Rev: 2A**
KiCad E.D.A. kicad 5.1.6-c6e7f7d87ubuntu19.10.1		Id: 1/1