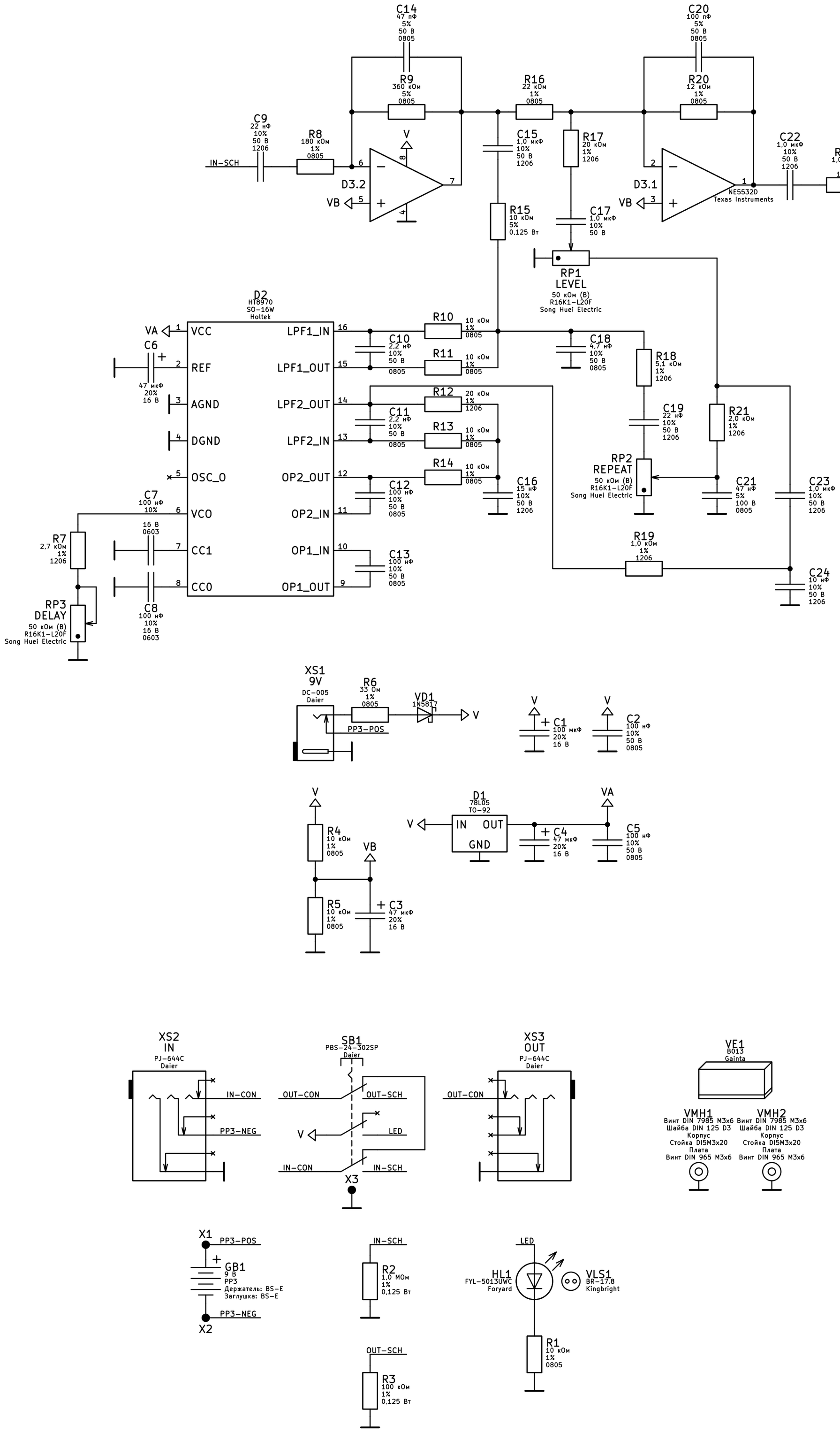

This project is licensed under GNU General Public License v3.0 or later
https://github.com/Adept666
Igor Ivanov

Sheet: /
File: deep_blue_delay_r3b.sch

Title: Deep Blue Delay

Size: A2	Date: 2021-07-29	**Rev: 3B**
KiCad E.D.A. kicad 5.1.6-c6e7f7d87ubuntu19.10.1		Id: 1/1