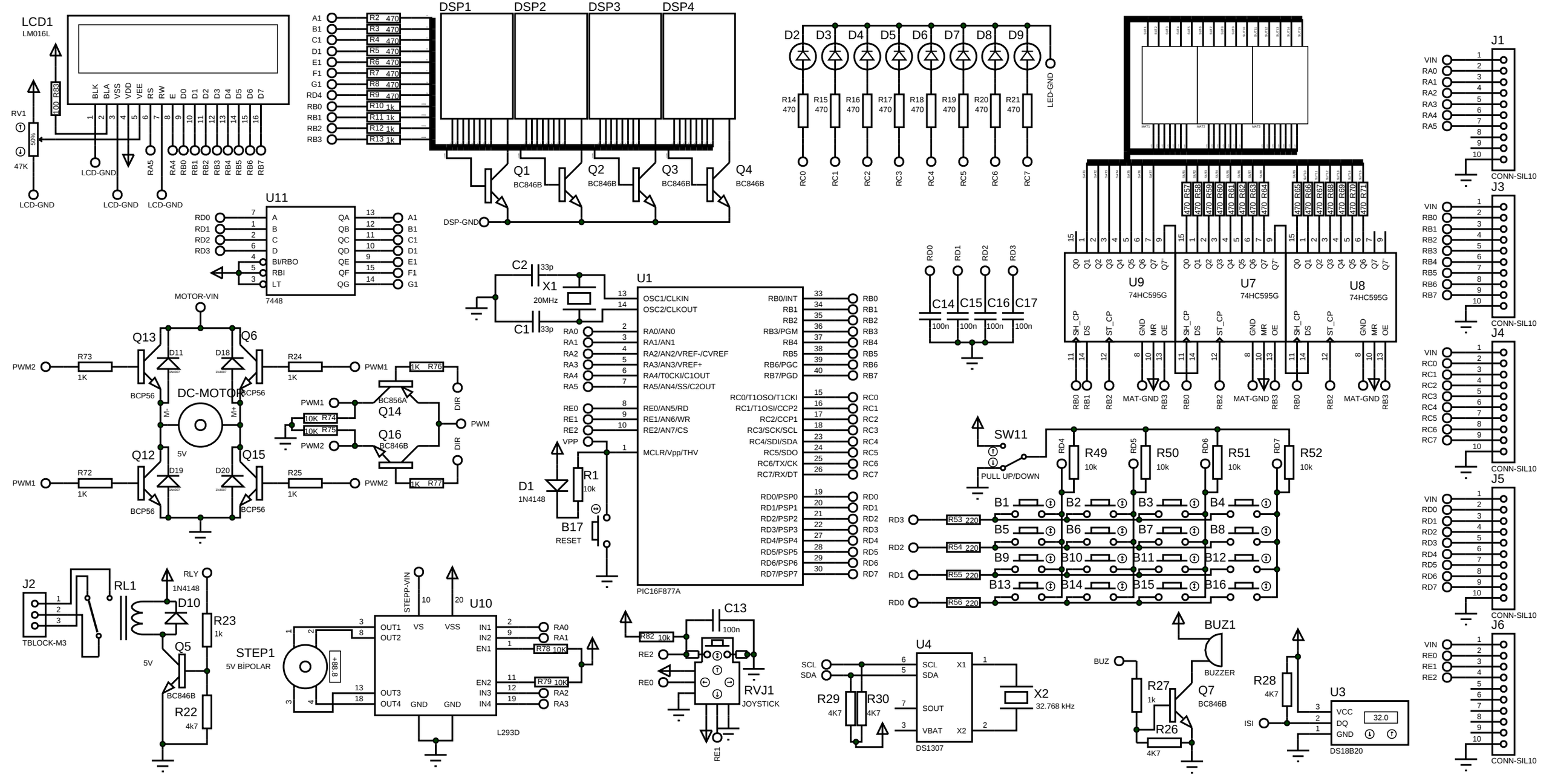
LCD1
LM016L
BLK BLA VSS VDD VEE RS RW E D0 D1 D2 D3 D4 D5 D6 D7
R83 100
RV1 50% 47K
LCD-GND
RA5 RA4 RB0 RB1 RB2 RB3 RB4 RB5 RB6 RB7
DSP1 DSP2 DSP3 DSP4
A1 B1 C1 D1 E1 F1 G1 RD4 RB0 RB1 RB2 RB3
R2 470 R3 470 R4 470 R5 470 R6 470 R7 470 R8 470 R9 470 R10 1k R11 1k R12 1k R13 1k
Q1 BC846B Q2 BC846B Q3 BC846B Q4 BC846B
DSP-GND
D2 D3 D4 D5 D6 D7 D8 D9
R14 470 R15 470 R16 470 R17 470 R18 470 R19 470 R20 470 R21 470
LED-GND
RC0 RC1 RC2 RC3 RC4 RC5 RC6 RC7
J1
VIN RA0 RA1 RA2 RA3 RA4 RA5
CONN-SIL10
J3
VIN RB0 RB1 RB2 RB3 RB4 RB5 RB6 RB7
J4
VIN RC0 RC1 RC2 RC3 RC4 RC5 RC6 RC7
J5
VIN RD0 RD1 RD2 RD3 RD4 RD5 RD6 RD7
J6
VIN RE0 RE1 RE2
U11
7448
RD0 RD1 RD2 RD3
A B C D BI/RBO RBI LT
QA QB QC QD QE QF QG
A1 B1 C1 D1 E1 F1 G1
MOTOR-VIN
Q13 Q6 Q12 Q15
BCP56
D11 D18 D19 D20
R73 1K R24 1K R72 1K R25 1K
PWM2 PWM1
DC-MOTOR
M- M+
5V
R76 1K R77 1K
BC856A Q14
Q16 BC846B
R74 10K R75 10K
DIR PWM
C2 33p X1 20MHz C1 33p
U1
PIC16F877A
OSC1/CLKIN OSC2/CLKOUT
RA0/AN0 RA1/AN1 RA2/AN2/VREF-/CVREF RA3/AN3/VREF+ RA4/T0CKI/C1OUT RA5/AN4/SS/C2OUT
RE0/AN5/RD RE1/AN6/WR RE2/AN7/CS
MCLR/Vpp/THV
RB0/INT RB1 RB2 RB3/PGM RB4 RB5 RB6/PGC RB7/PGD
RC0/T1OSO/T1CKI RC1/T1OSI/CCP2 RC2/CCP1 RC3/SCK/SCL RC4/SDI/SDA RC5/SDO RC6/TX/CK RC7/RX/DT
RD0/PSP0 RD1/PSP1 RD2/PSP2 RD3/PSP3 RD4/PSP4 RD5/PSP5 RD6/PSP6 RD7/PSP7
D1 1N4148 R1 10k B17 RESET
C14 C15 C16 C17 100n
U9 U7 U8
74HC595G
SH_CP DS ST_CP GND MR OE
MAT-GND
SW11 PULL UP/DOWN
R49 10k R50 10k R51 10k R52 10k
B1 B2 B3 B4 B5 B6 B7 B8 B9 B10 B11 B12 B13 B14 B15 B16
R53 220 R54 220 R55 220 R56 220
J2 TBLOCK-M3
RL1 1N4148 D10 RLY R23 1k Q5 BC846B R22 4k7 5V
STEP1 5V BİPOLAR
STEPP-VIN
U10 L293D
OUT1 OUT2 OUT3 OUT4 VS VSS GND IN1 IN2 EN1 EN2 IN3 IN4
R78 10k R79 10k
C13 100n R82 10k RE2 RE0 RE1
RVJ1 JOYSTICK
U4 DS1307
SCL SDA SOUT VBAT X1 X2
R29 4K7 R30 4K7 X2 32.768 kHz
BUZ1 BUZZER
BUZ R27 1k Q7 BC846B R26 4K7
R28 4K7 ISI U3 DS18B20
VCC DQ GND 32.0

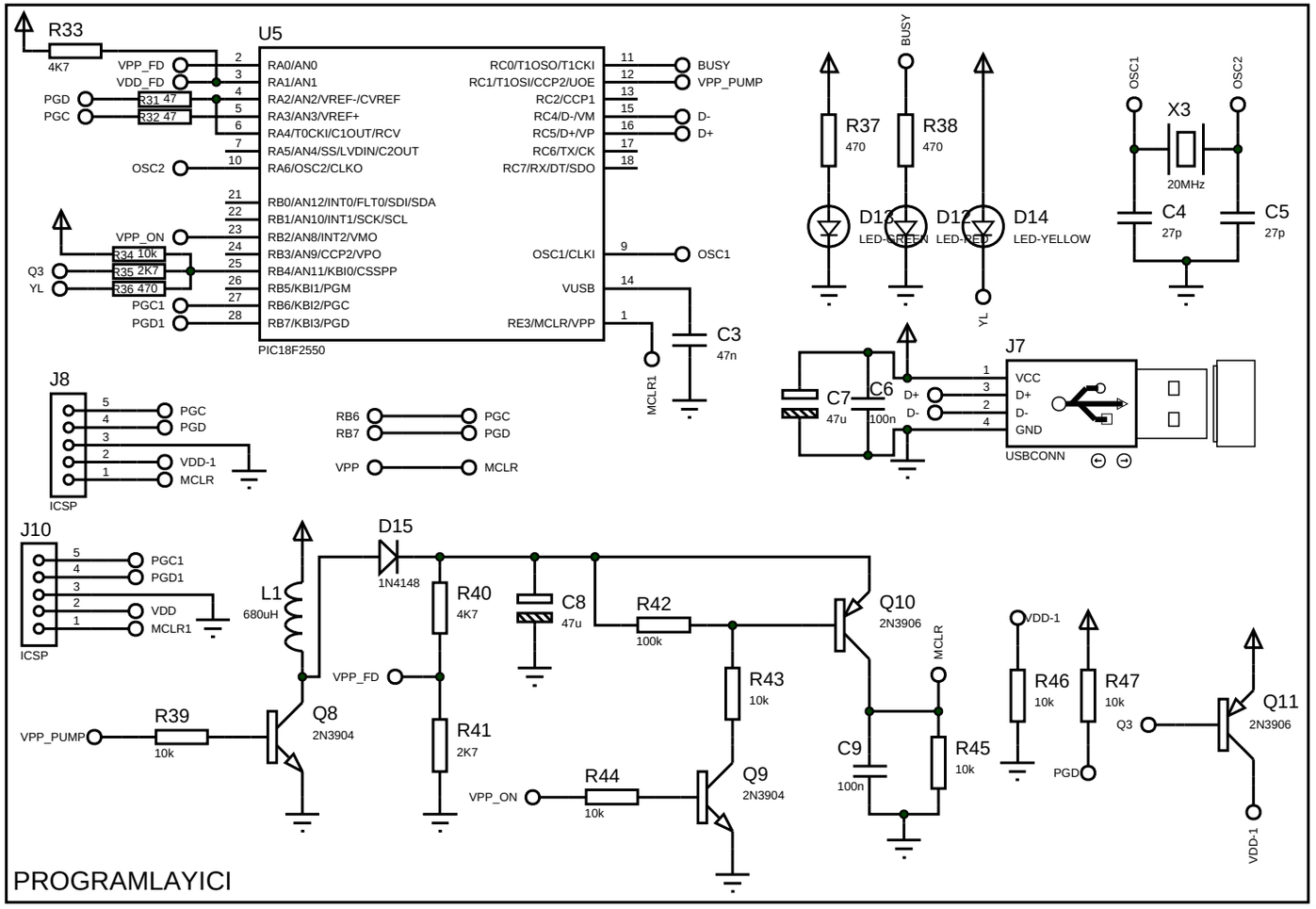
R33
4K7
U5
VPP_FD
VDD_FD
PGD
PGC
R31 47
R32 47
OSC2
VPP_ON
Q3
YL
R34 10k
R35 2K7
R36 470
PGC1
PGD1
RA0/AN0
RA1/AN1
RA2/AN2/VREF-/CVREF
RA3/AN3/VREF+
RA4/T0CKI/C1OUT/RCV
RA5/AN4/SS/LVDIN/C2OUT
RA6/OSC2/CLKO
RB0/AN12/INT0/FLT0/SDI/SDA
RB1/AN10/INT1/SCK/SCL
RB2/AN8/INT2/VMO
RB3/AN9/CCP2/VPO
RB4/AN11/KBI0/CSSPP
RB5/KBI1/PGM
RB6/KBI2/PGC
RB7/KBI3/PGD
RC0/T1OSO/T1CKI
RC1/T1OSI/CCP2/UOE
RC2/CCP1
RC4/D-/VM
RC5/D+/VP
RC6/TX/CK
RC7/RX/DT/SDO
OSC1/CLKI
VUSB
RE3/MCLR/VPP
PIC18F2550
BUSY
VPP_PUMP
D-
D+
OSC1
C3
47n
MCLR1
R37
470
R38
470
D13
LED-GREEN
D12
LED-RED
D14
LED-YELLOW
OSC1
OSC2
X3
20MHz
C4
27p
C5
27p
J8
ICSP
PGC
PGD
VDD-1
MCLR
RB6
RB7
VPP
J7
C7
47u
C6
100n
VCC
D+
D-
GND
USBCONN
J10
ICSP
PGC1
PGD1
VDD
MCLR1
L1
680uH
D15
1N4148
R40
4K7
C8
47u
R42
100k
Q10
2N3906
VPP_FD
R43
10k
R41
2K7
R39
10k
VPP_PUMP
Q8
2N3904
R44
10k
VPP_ON
Q9
2N3904
C9
100n
R45
10k
MCLR
VDD-1
R46
10k
R47
10k
PGD
Q3
Q11
2N3906
VDD-1
PROGRAMLAYICI

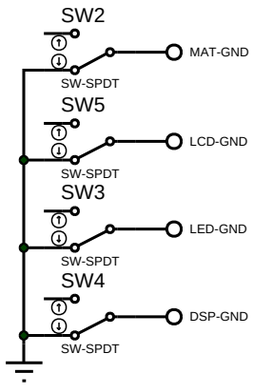
SW2
MAT-GND
SW-SPDT
SW5
LCD-GND
SW-SPDT
SW3
LED-GND
SW-SPDT
SW4
DSP-GND
SW-SPDT

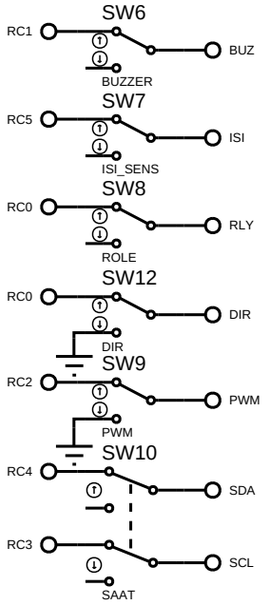
RC1
SW6
BUZ
BUZZER
RC5
SW7
ISI
ISI_SENS
RC0
SW8
RLY
ROLE
RC0
SW12
DIR
DIR
RC2
SW9
PWM
PWM
RC4
SW10
SDA
RC3
SCL
SAAT

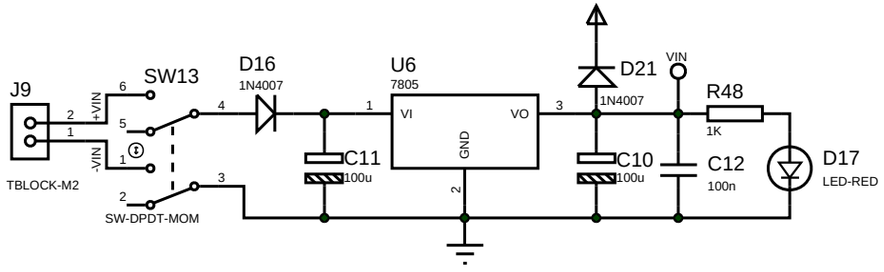
J9
TBLOCK-M2
+VIN
-VIN
SW13
SW-DPDT-MOM
D16
1N4007
U6
7805
VI
VO
GND
C11
100u
D21
1N4007
VIN
R48
1K
C10
100u
C12
100n
D17
LED-RED

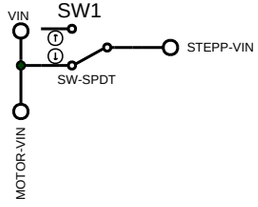
VIN
SW1
STEPP-VIN
SW-SPDT
MOTOR-VIN