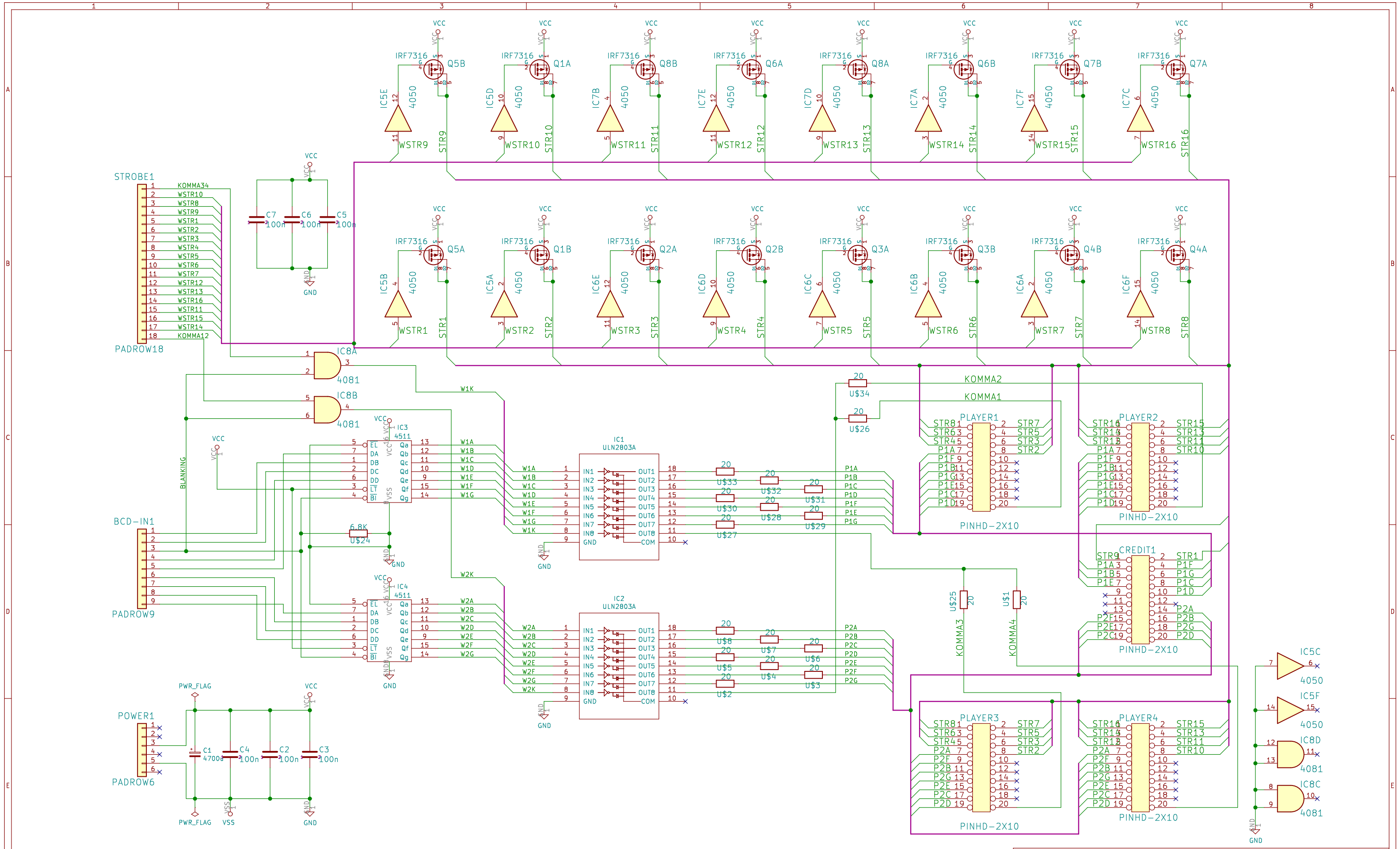

Sheet: /
File: S7Driver20p_.sch

Title: S7Driver20p.sch

Size: A3	Date: 9 apr 2015	Rev:
KiCad E.D.A. kicad 5.0.2-bee76a070ubuntu18.04.1		Id: 1/1