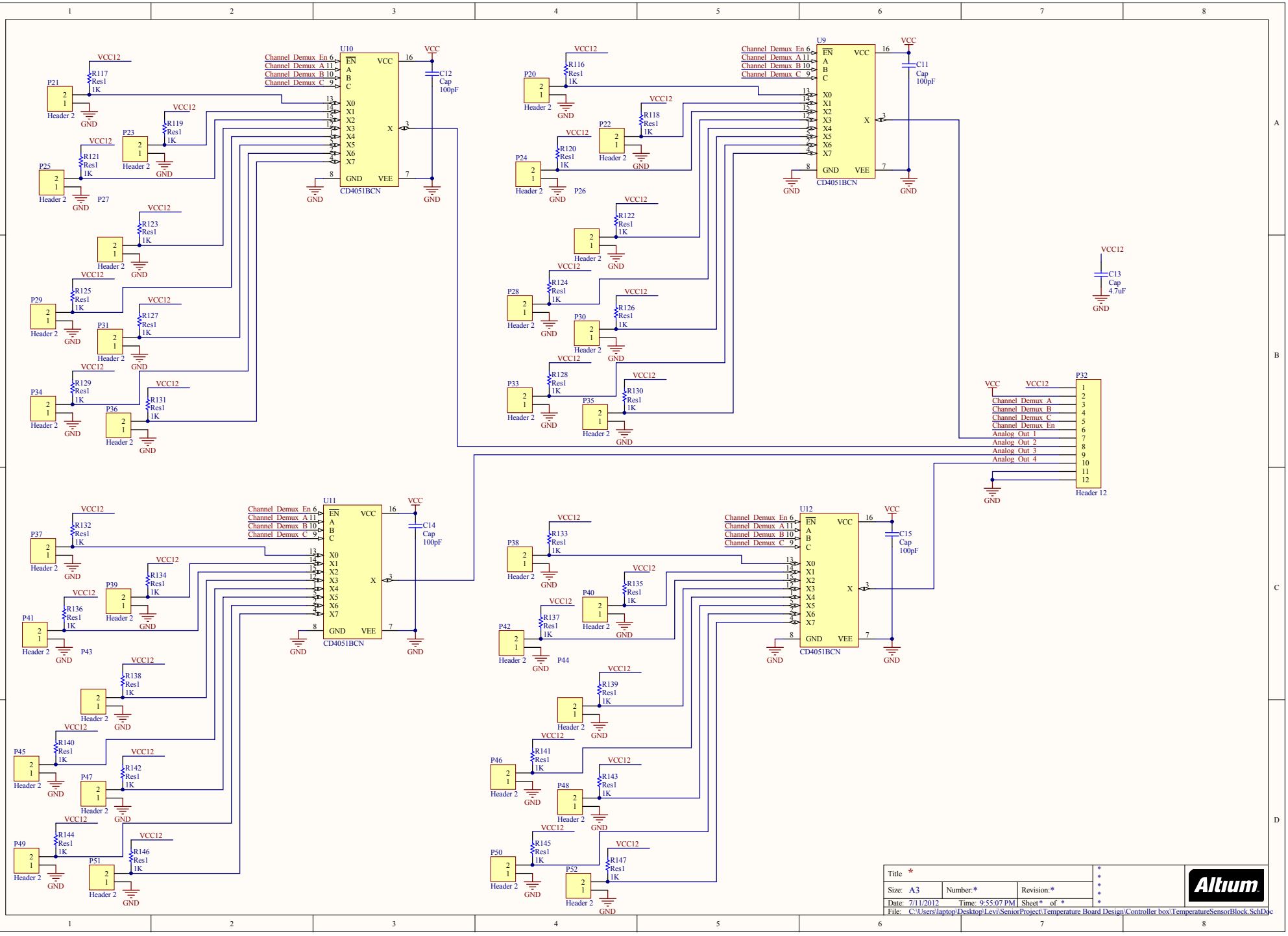
U10
U9
U11
U12
CD4051BCN
Channel_Demux_En
Channel_Demux_A
Channel_Demux_B
Channel_Demux_C
VCC
VCC12
GND
VEE
C11 Cap 100pF
C12 Cap 100pF
C13 Cap 4.7uF
C14 Cap 100pF
C15 Cap 100pF
P32
Header 12
Analog_Out_1
Analog_Out_2
Analog_Out_3
Analog_Out_4
Header 2
Title *
Size: A3
Number:*
Revision:*
Date: 7/11/2012
Time: 9:55:07 PM
Sheet * of *
File: C:\Users\laptop\Desktop\Levi\SeniorProject\Temperature Board Design\Controller box\TemperatureSensorBlock.SchDoc
Altium