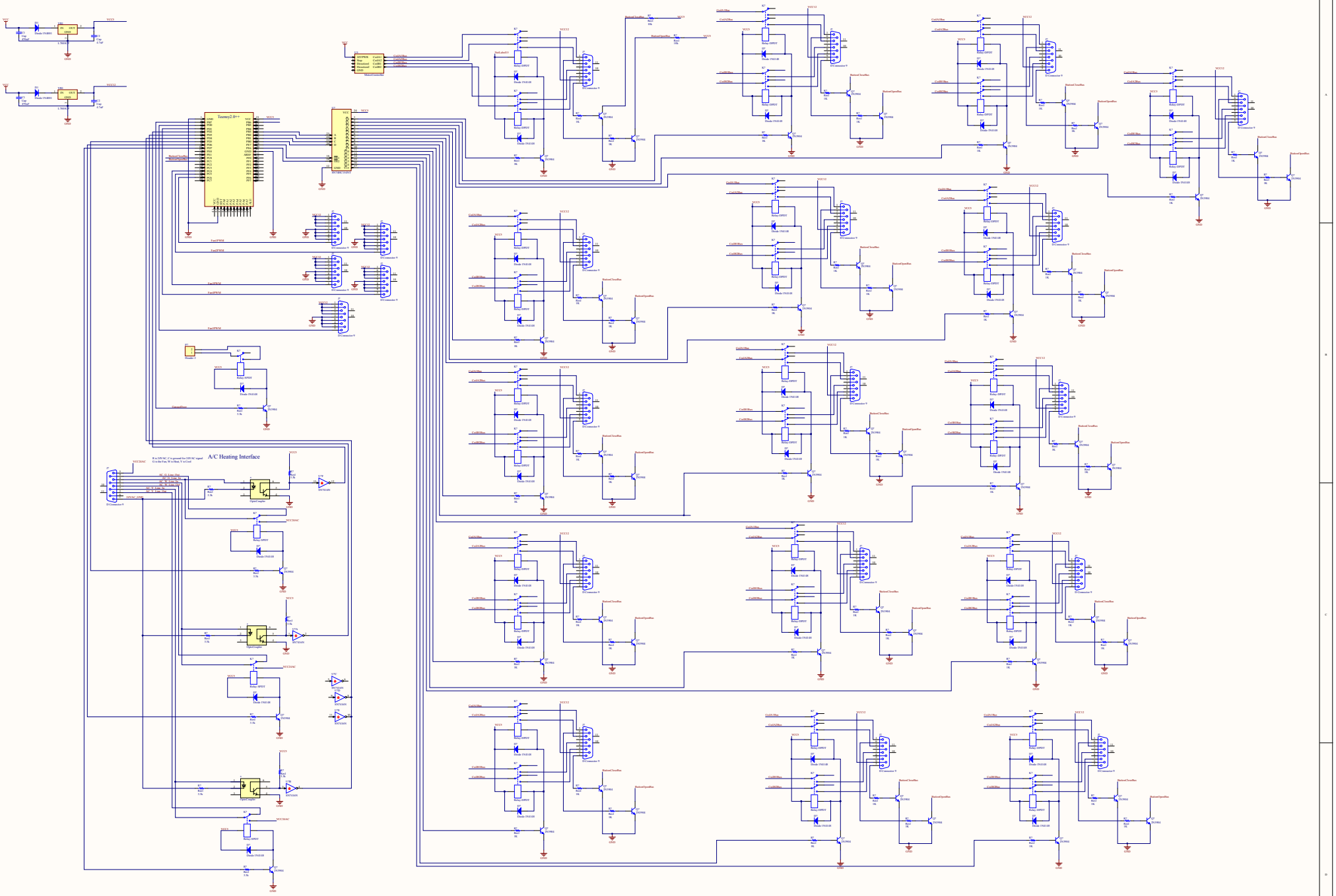
A/C Heating Interface
Teensy2.0++
Relay-DPDT
Diode 1N4148
D-Connector 9
Open Coupler
SN74AS05N
Diode 1N4148
Diode 1N4148
Diode 1N4148