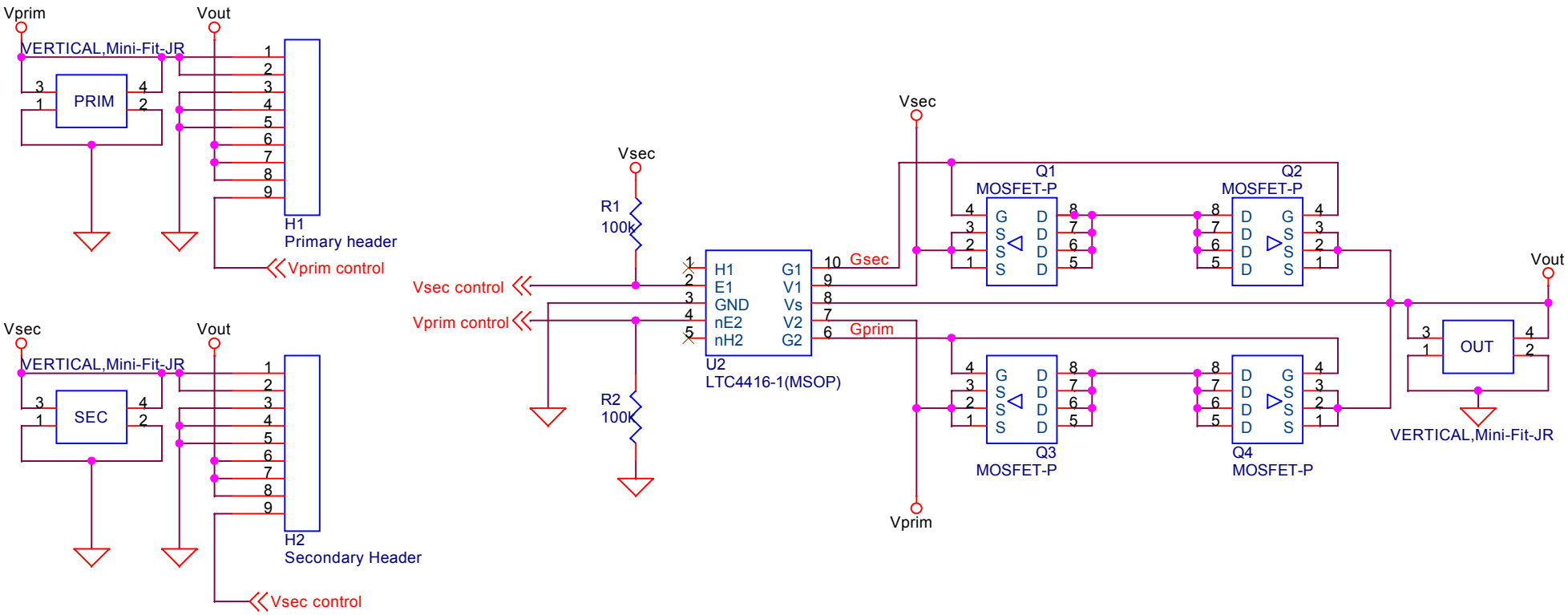

Title	picoUPS-MAINBOARD (c)opyright mini-box.com	
Size A	Document Number 1,0	Rev 0
Date: Wednesday, June 09, 2010	Sheet 1 of 1	