Hardware architecture

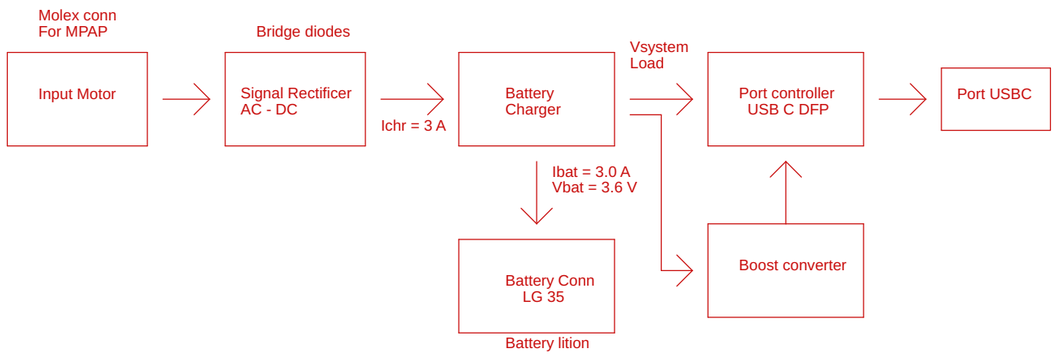

TITLE: Beechat_Crank_v1.2	
Document Number:	REV:
Date: 4/11/2021 10:03	Sheet: 1/2

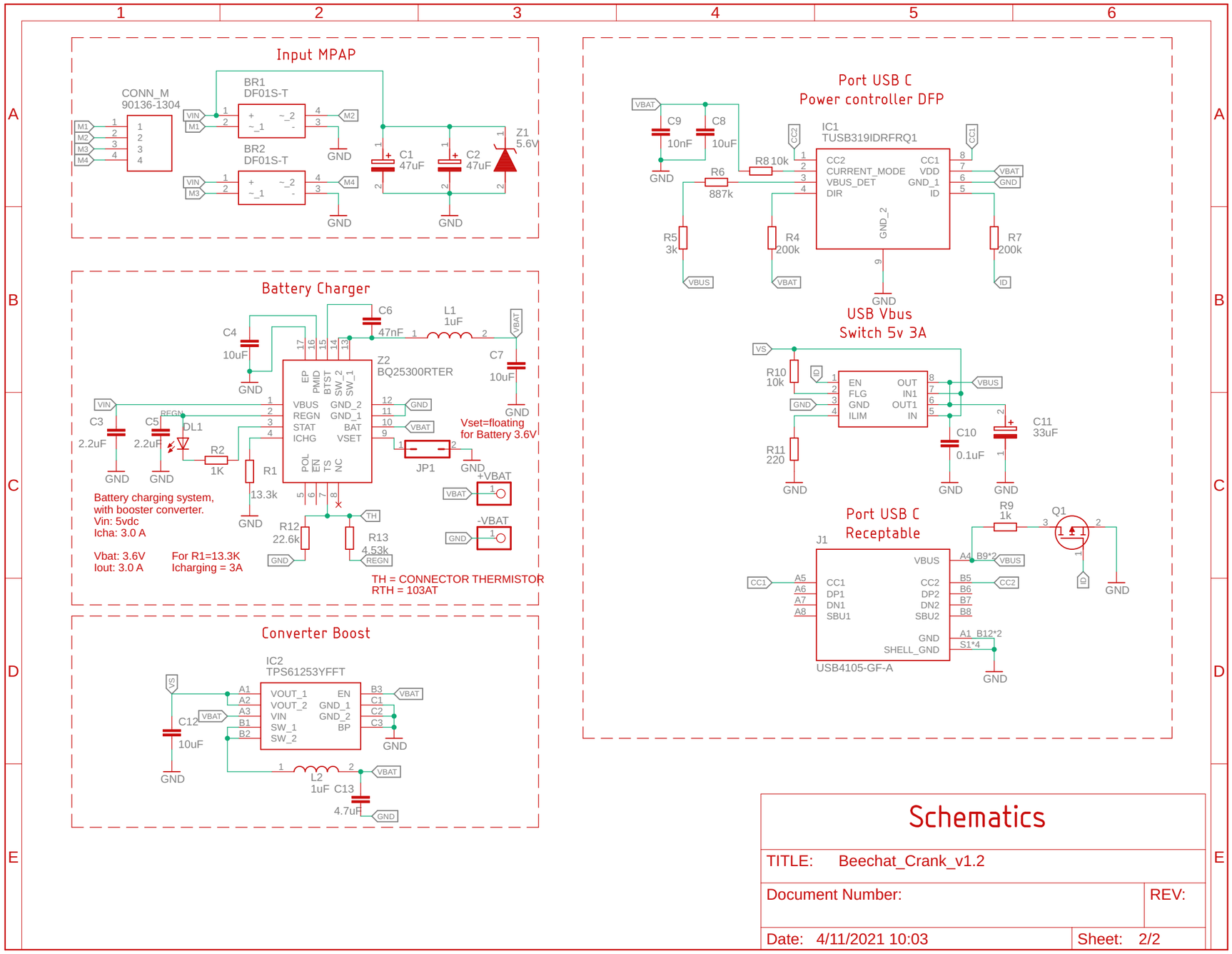

Schematics

TITLE: Beechat_Crank_v1.2	
Document Number:	REV:
Date: 4/11/2021 10:03	Sheet: 2/2