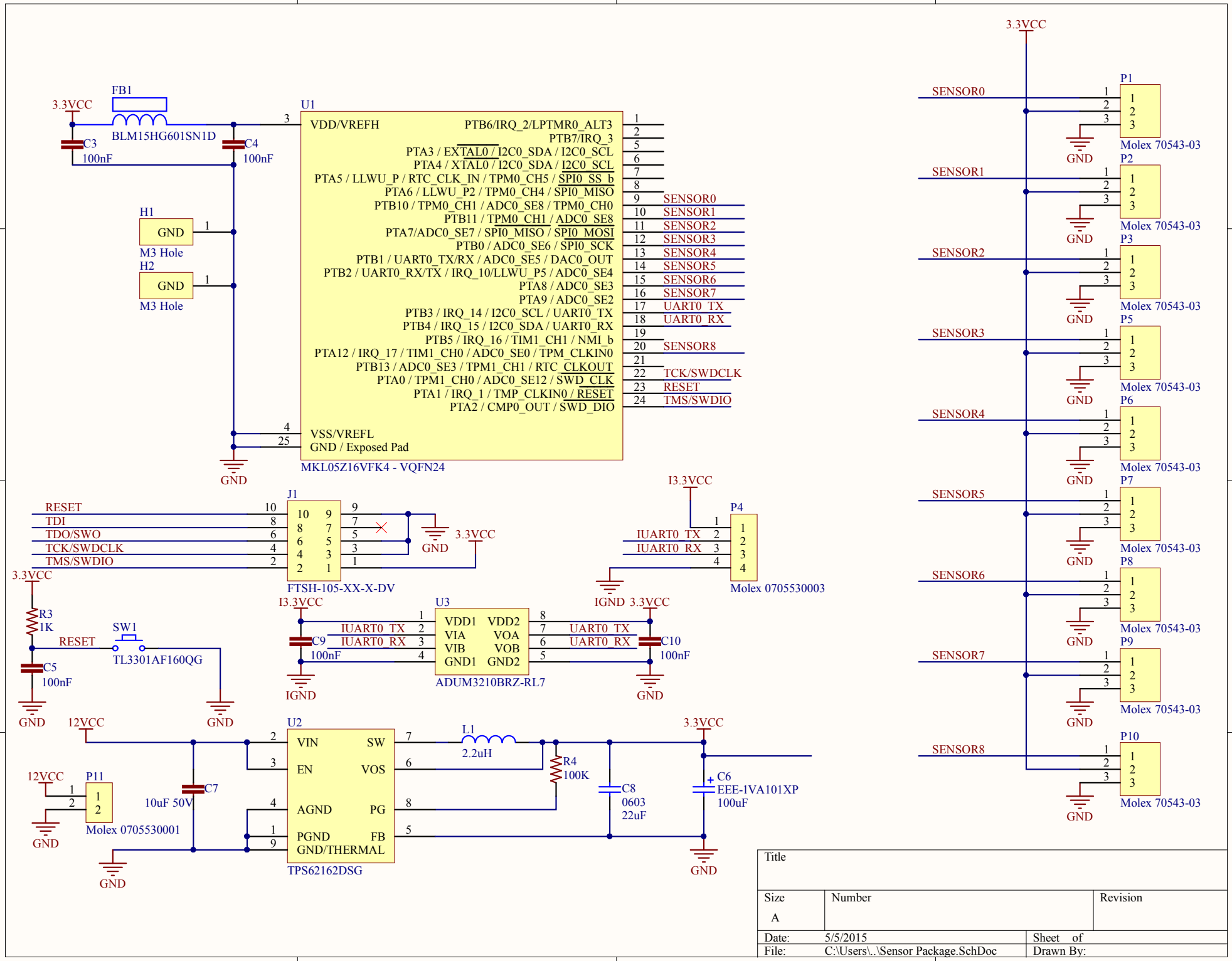

Title		
Size A	Number	Revision
Date: 5/5/2015		Sheet of
File: C:\Users\..\Sensor Package.SchDoc		Drawn By:

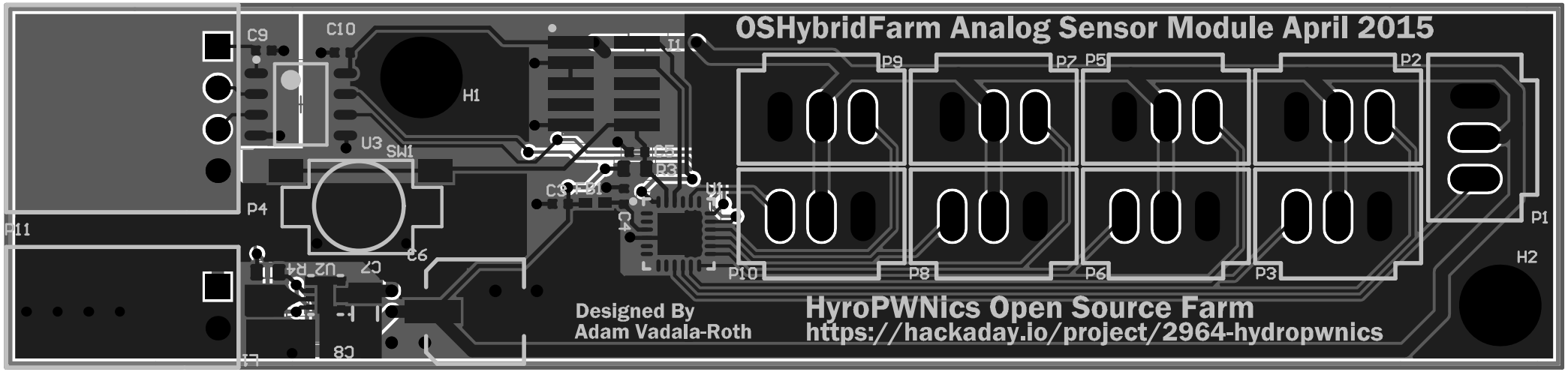
OSHybridFarm Analog Sensor Module April 2015
C9
C10
H1
U3
SW1
P4
P11
C6
C7
U2_R4
C8
L1
I1
C5
P3
C3
C1
U1
P9
P7
P5
P2
P1
P10
P8
P6
P3
H2
Designed By
Adam Vadala-Roth
HyroPWNics Open Source Farm
https://hackaday.io/project/2964-hydropwnics