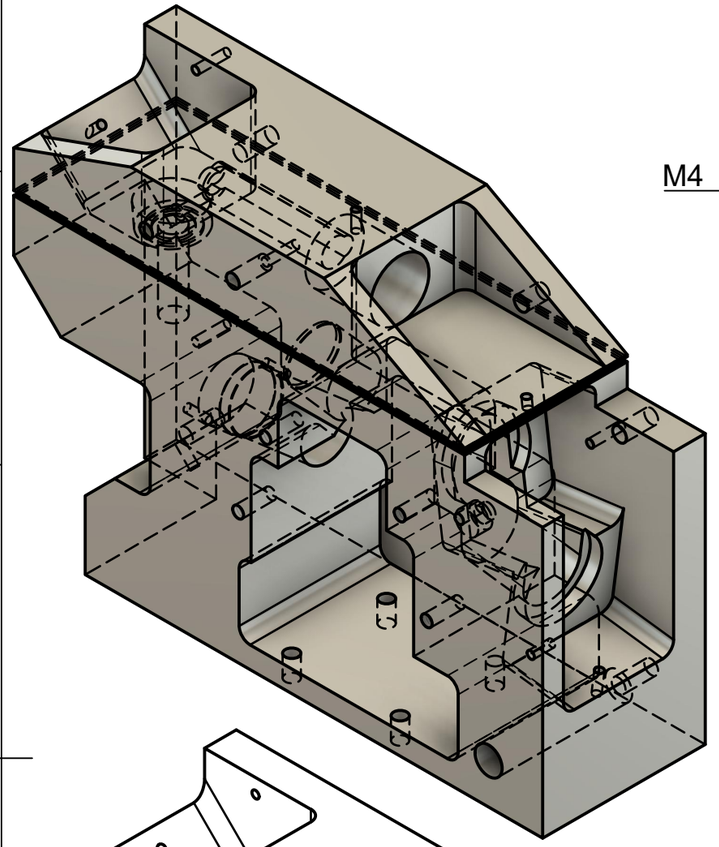

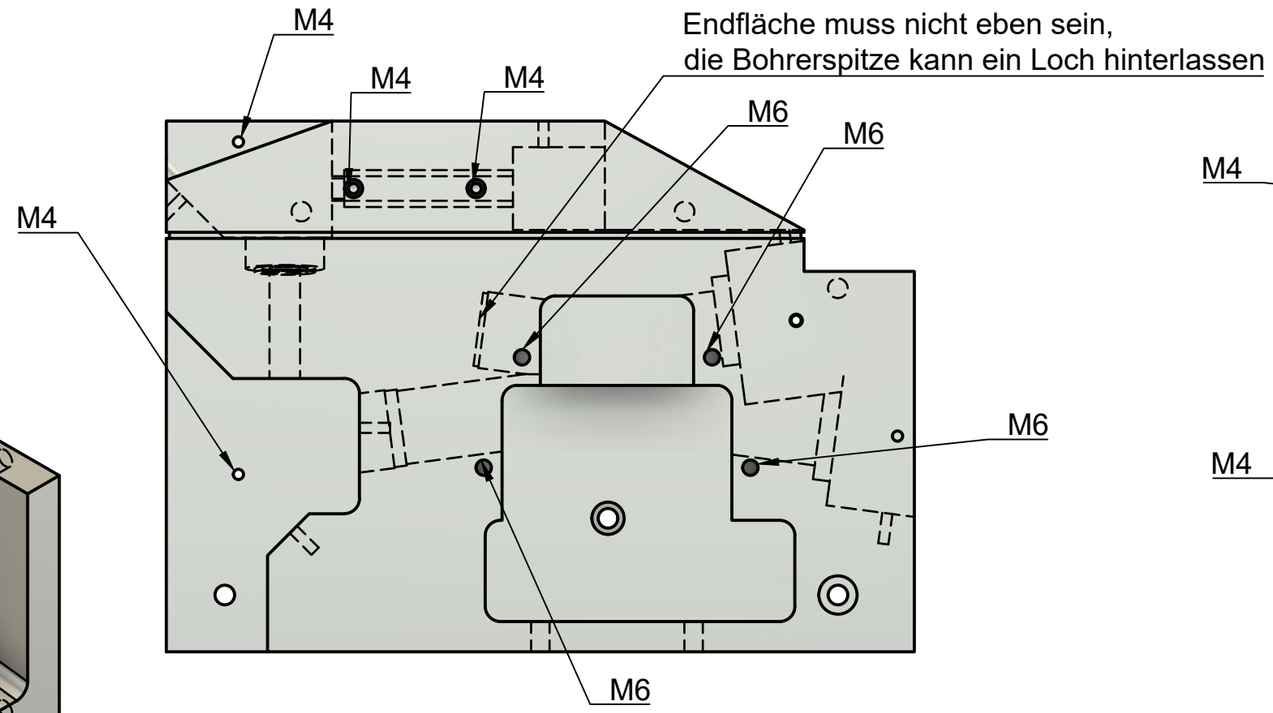

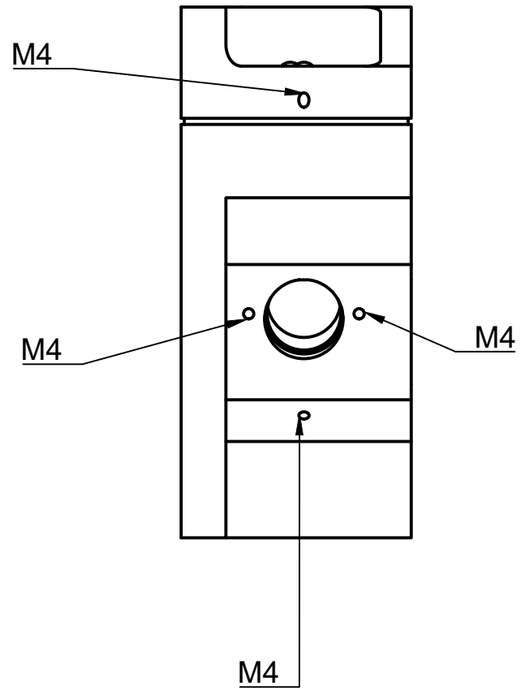

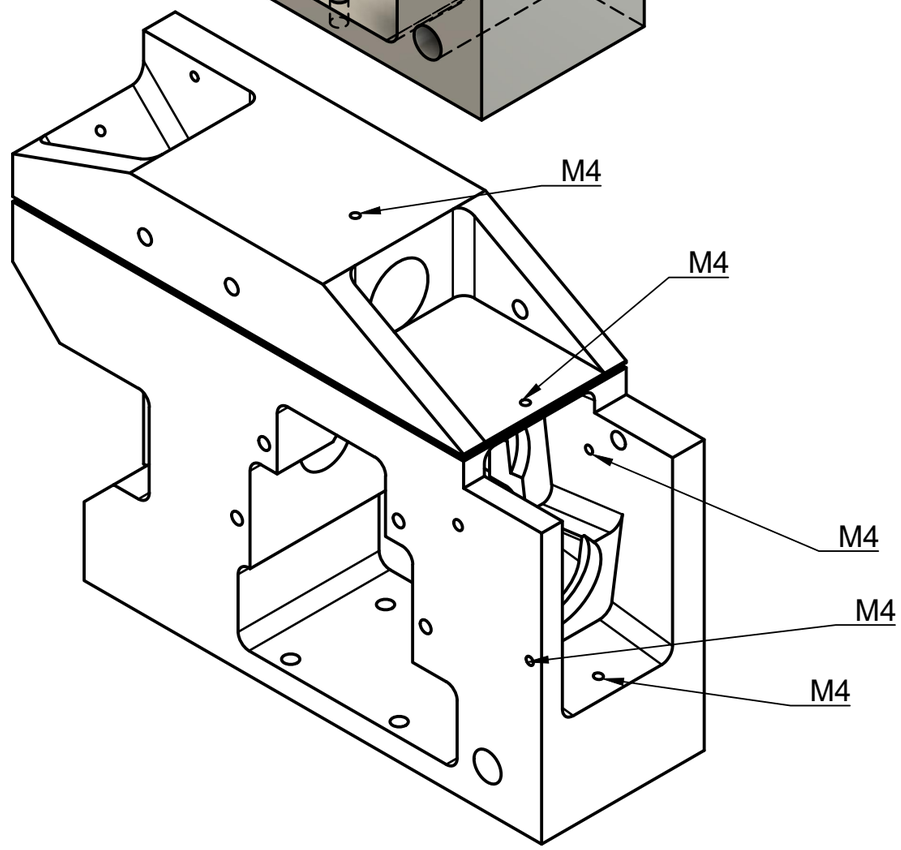

Dept.	Technical reference	Created by Benedikt Moneke 11.02.2020	Approved by	
Allgemeintoleranz DIN ISO 2768 - m Bohrungen in fein mit unterem Abmaß 0		Document type	Document status	
		Title OPO-Monolith3	DWG No.	
			Rev. / Date of issue	Sheet 1/1