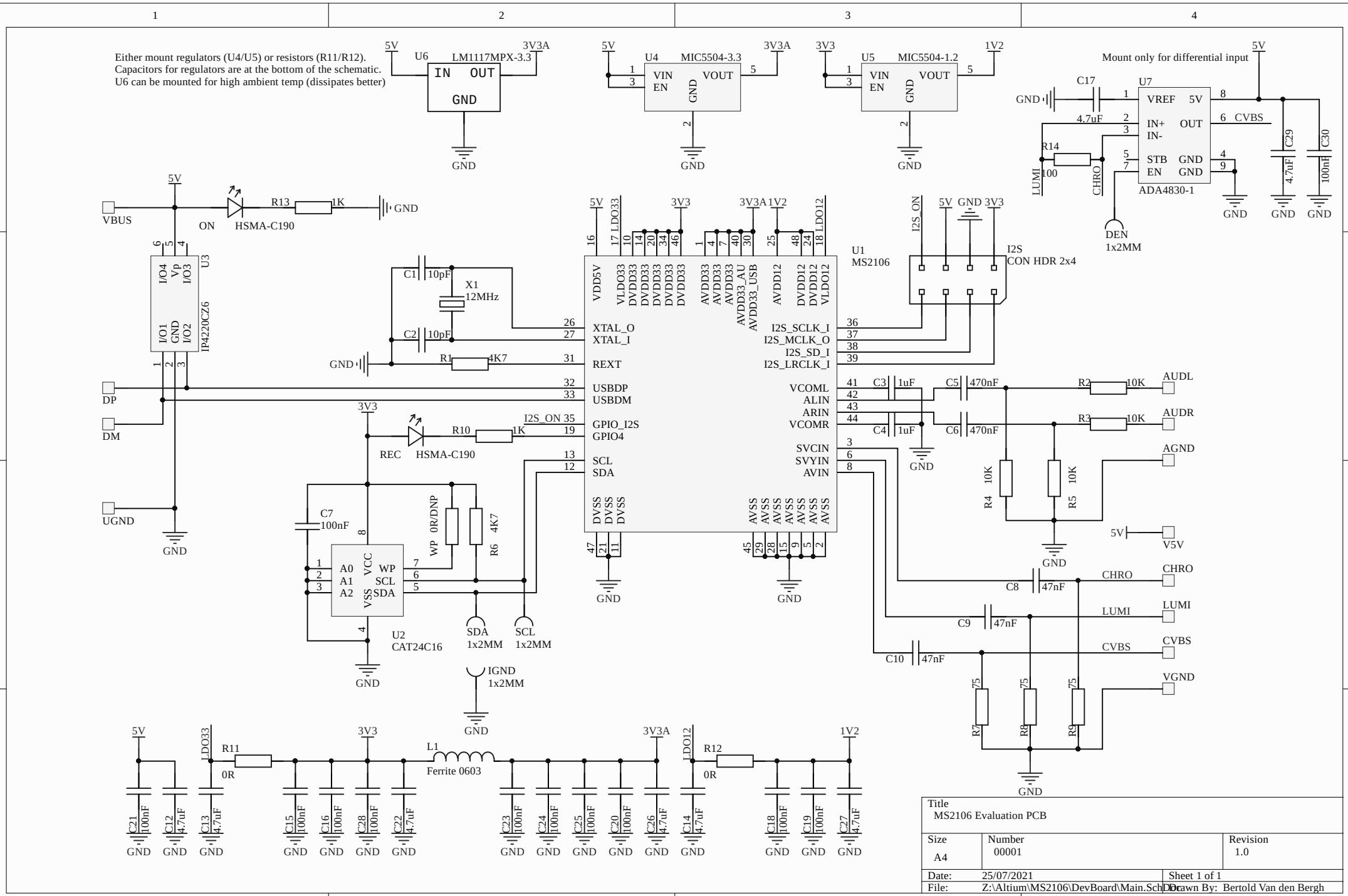

Title: MS2106 Evaluation PCB		
Size: A4	Number: 00001	Revision: 1.0
Date: 25/07/2021	Sheet 1 of 1	
File: Z:\Altium\MS2106\DevBoard\Main.SchDoc	Drawn By: Bertold Van den Bergh	